TFT-Display Datasheet

OT070CGWDLT-00 | ONation

Features

Active Screen Area	152.4x91.44 [mm]
Size | Format	7“ | 5:3
Resolution	800x480
Backlight	LED
Brightness	280 cd/m^2
LED Life Time	N/A
Interface	LVDS
Viewing Angle	L/R 80/80 - U/D 80/80
Touchscreen	resistiv
Power Supply	3.3V [Typ.]
Module Outline	165.0x106.4x6.85 [mm]
Operation Temperature	-10… + 60°C
Storage Temperature	-20… + 70°C

Contact

HY-LINE Computer Components
Vertriebs GmbH
Inselkammerstr. 10
82008 Unterhaching
Germany

Support
Tel.: +49 89 614 503 40
Fax. +49 89 614 503 50

Send us an email
computer@hy-line.de

ONation Corporation

TFT COLOR LCD MODULE

MODEL: OT070CGWDLT-00

WVGA
LVDS interface (1port)

Version: P0.1

Customer : _____

Approved By : _____

Date: _____

ONATION		
APPROVAL	**CHECKER**	**PREPARE**
	Josh	

All information is subject to change without notice.
Please confirm the sales representative before starting to design your system

ONation Corporation
All rights reserved 2014

C O N T E N T S

NO.	ITEM	PAGE
1	RECORD OF REVISION	0-1
2	MECHANICAL SPECIFICATIONS	1
3	OUTLINE DIMENSIONS	2
4	INTERFACE PIN CONNECTION	3
5	BLOCK DIAGRAM	4
6	ABSOLUTE MAXIMUM RATINGS	5
7	ELECTRICAL CHARACTERISTICS	6
8	OPTICAL CHARACTERISTICS	7~9
9	TOUCH PANEL SPECIFICATIONS	10
10	TIMING SPECIFICATIONS	11~13
11	RELIABILITY TEST	14
12	LCM INSPECTION STANDARD	15
13	PACKAGE INFORMATION	15
14	PRECAUTIONS FOR USE	16

1.RECORD OF REVISION

REV	DATE	PAGE	SUMMARY
0.1	2014.01.17	ALL	Preliminary specification was first issued.

2.MECHANICAL SPECIFICATIONS

(1)	Number Of Dots (Dots)	800(R.G.B) X 480
(2)	Module Size(mm)	165.0(H) X 106.4(V) X 6.85(D)
(3)	Active Area(mm)	152.4(H) X 91.44(V)
(4)	Pixel Pitch(mm)	0.1905 (H) X 0.1905(V)
(5)	LCD / Polarizer Model	TFT , Transmissive, Normally/ White, Anti-Glare
(6)	Backlight Color	White, LED
(7)	Viewing Direction	12 O'clock Horizontal：Right side 80°(typ.), Left side 80°(typ.) Vertical：Up side 80°(typ.), Down side 80°(typ.)
(8)	Gray Scale Inversion Direction	6 O'clock
(9)	Electrical Interface	LVDS Interface
(10)	Color Configuration	R.G.B Stripe
(11)	Module Weight(g)	150±5%

3. OUTLINE DIMENSIONS

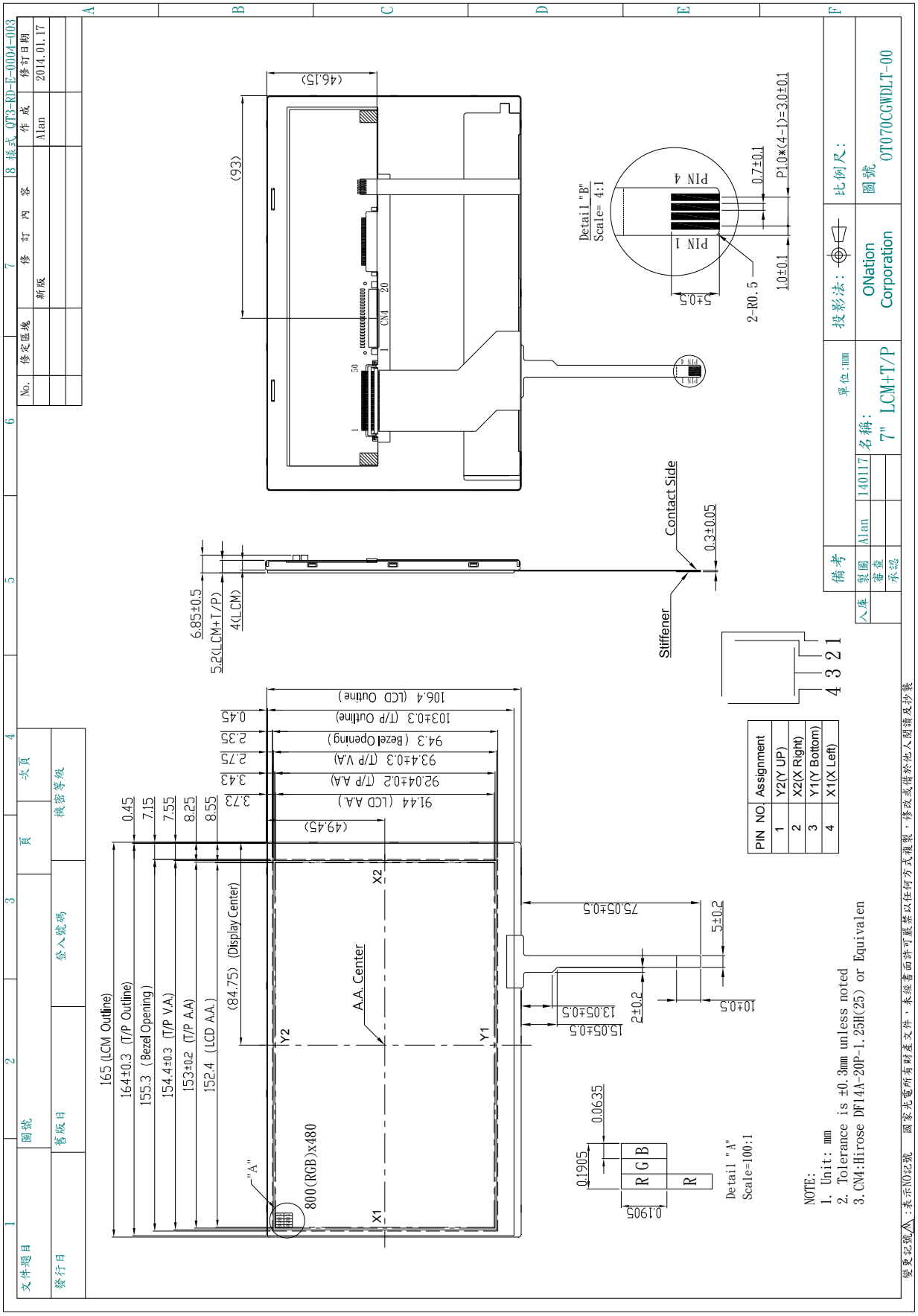

PIN NO.	Assignment
1	Y2(Y UP)
2	X2(X Right)
3	Y1(Y Bottom)
4	X1(X Left)

4. INTERFACE PIN CONNECTION

4.1 LCM PANEL DRIVING SECTION

CN1 Connector：Hirose DF14A-20P-1.25H(25) or Equivalen

Mating Connector：Hirose DF14-20S-1.25C or Equivalen

PIN NO.	SIGNAL	FUNCTION
1	VCC	Power Supply For Digital Circuit
2	VCC	Power Supply For Digital Circuit
3	GND	Ground
4	GND	Ground
5	RxIN0-	Differential Data Input, CH0(Negative)
6	RxIN0+	Differential Data Input, CH0(Positive)
7	GND	Ground
8	RxIN1-	Differential Data Input, CH1(Negative)
9	RxIN1+	Differential Data Input, CH1(Positive)
10	GND	Ground
11	RxIN2-	Differential Data Input, CH2(Negative)
12	RxIN2+	Differential Data Input, CH2(Positive)
13	GND	Ground
14	CLKIN-	Differential Clock Input(Negative)
15	CLKIN+	Differential Clock Input(Positive)
16	GND	Ground
17	VLED	Power Supply For LED Driver Circuit
18	VLED	Power Supply For LED Driver Circuit
19	GND	Ground
20	ADJ	Brightness Control For LED B/L

4.2 TOUCH PANEL SCREEN

PIN NO.	SIGNAL	FUNCTION	REMARK
1	Y2	TOUCH PANEL SIGNAL(Y-TOP)	
2	X2	TOUCH PANEL SIGNAL(X-Right)	
3	Y1	TOUCH PANEL SIGNAL(Y-Bottom)	
4	X1	TOUCH PANEL SIGNAL(X-Left)	

5. BLOCK DIAGRAM

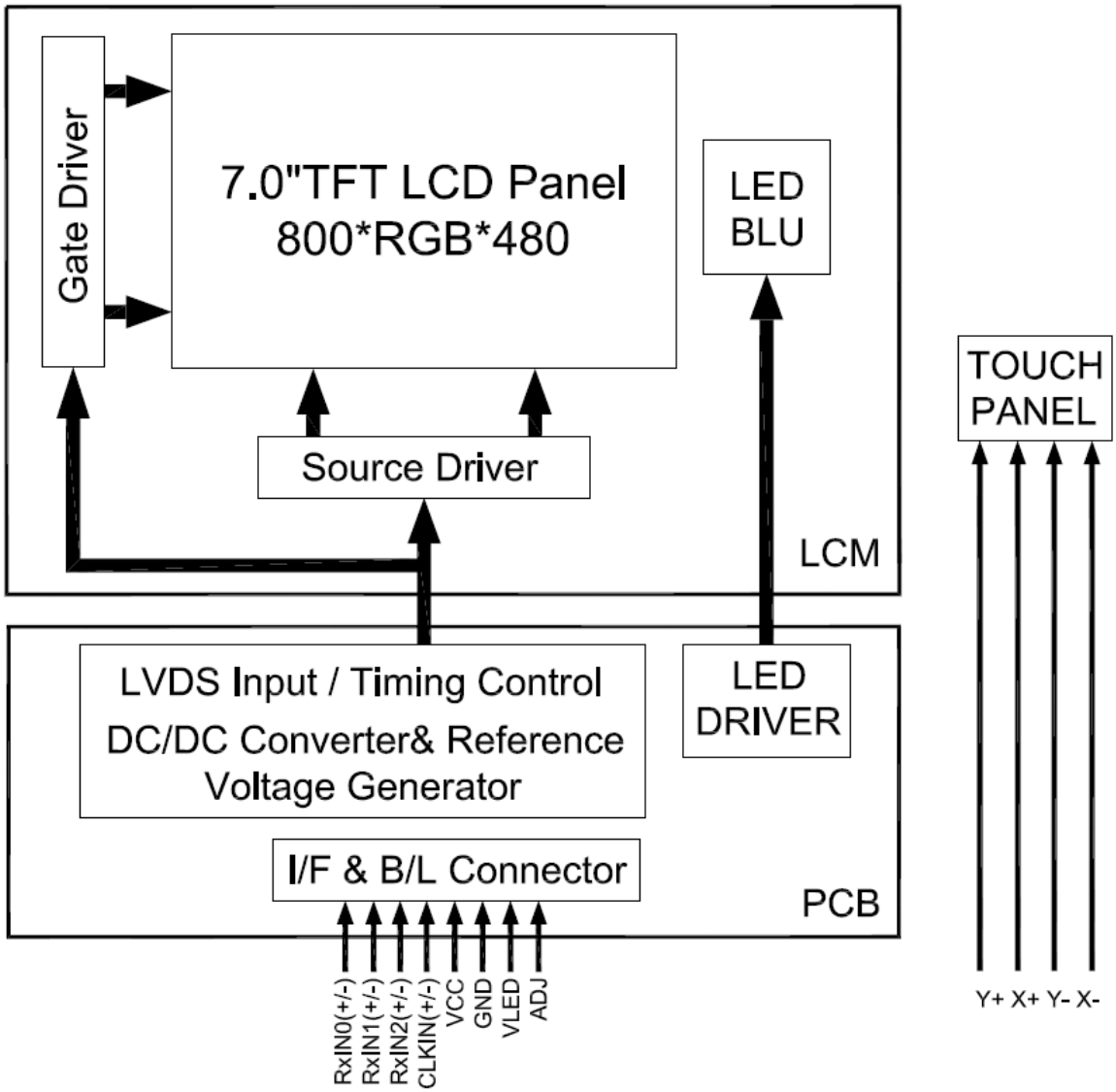

6. ABSOLUTE MAXIMUM RATINGS

6.1 ELECTRICAL ABSOLUTE MAXIMUM RATINGS

ITEM	SYMBOL	MIN.	MAX.	UNIT	REMARK
Power Supply Voltage	VCC	-0.3	5.0	V	
	VLED	-0.3	6.0	V	
	ADJ	-0.3	6.0	V	

Note: The absolute maximum rating values of this product not allowed to be exceeded at any times. Should be module be used with any of absolute maximum ratings exceeded. The characteristics of the module may not be recovered, or in an extreme case, the module may be permanently destroyed.

6.2 ENVIRONMENTAL ABSOLUTE MAXIMUM RATINGS

ITEM	OPERATING		STORAGE		REMARK
	MIN.	MAX.	MIN.	MAX.	
Ambient Temperature(℃)	-10	60	-20	70	Note 1,2
Humidity(% RH)	Note 3		Note 3		Note 3

Note 1 : The response time will become lower when operated at low temperature.

Note 2 : Background color changes slightly depending on ambient temperature.

Note 3 : Operation Ta=40℃ & RH=90% ≦ 96Hrs.

7. ELECTRICAL CHARACTERISTICS

7.1 ELECTRICAL CHARACTERISTICS OF LCD

Ta=25℃

ITEM	SYMBOL	MIN.	TYP.	MAX.	UNIT	REMARK
Power Voltage For LCD	VCC	3.0	3.3	3.6	V	
	ICC	-	200	250	mA	Note 1

Note 1：Test condition：VCC=3.3V；Test Pattern：Black.

7.2 BACKLIGHT UNITS

Ta=25℃

ITEM	SYMBOL	MIN.	TYP.	MAX.	UNIT
LED Driving Voltage	VLED	3.0	5.0	5.5	V
	ILED (VLED=5V)	-	400	550	A
ADJ Input Analog Dimming Voltage	VIH	2.0	-	-	V
ADJ Input PWM Dimming Voltage	VIL	-	-	0.8	V
ADJ frequency	-	20	-	200	KHz

Note 1:The figure below shows the connection of backlight LED.

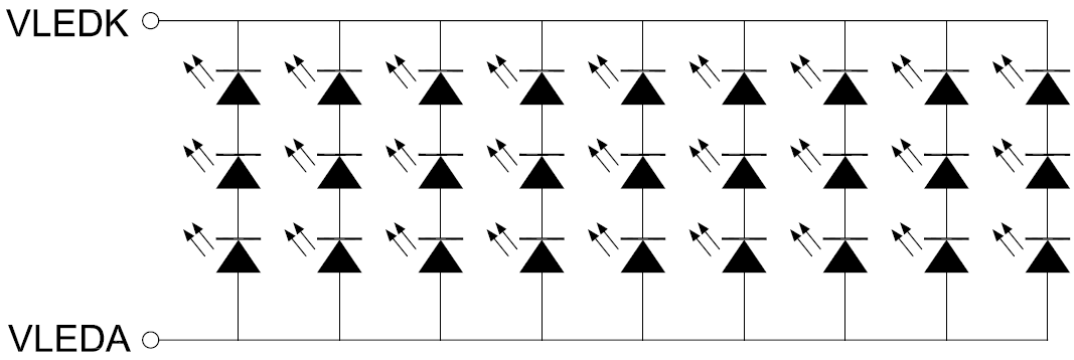

8. OPTICAL CHARACTERISTICS

Ta=25℃

ITEM		SYMBOL	CONDITIONS	MIN.	TYP.	MAX.	UNIT	REMARK
Contrast Ratio		CR	Viewing Normal Angle Θx=Θy=0°	(250)	(300)	-	-	Note 1
Response Time		TR		-	5	10	ms	Note 2
		TF		-	15	20	ms	
Chromaticity	White	x		(0.28)	(0.33)	(0.38)	-	Note 4
		y		(0.33)	(0.38)	(0.43)	-	
Viewing Angle	Hor.	θx+	Viewing Angle Θx=Θy=0° CR≧10	70	80	-	Deg.	Note 3
		θx -		70	80	-		
	Ver.	θy+		70	80	-		
		θy -		70	80	-		
Luminance		L	PWM=100%	(220)	(280)	-	cd/m2	-
Uniformity		-	-	70	-	-	%	Note 5

Note 1：Definition of Contrast Ratio (CR)：

The contrast ratio can be calculated by the following expression.

Contrast Ratio (CR) = L63/L0

L63：Luminance of gray level 63

L0：Luminance of gray level 0

CR = CR(5)

CR(X) is corresponding to the Contrast Ratio of the point X at Figure in Note 5

Note 2：Definition of Response Time (TR.TF)

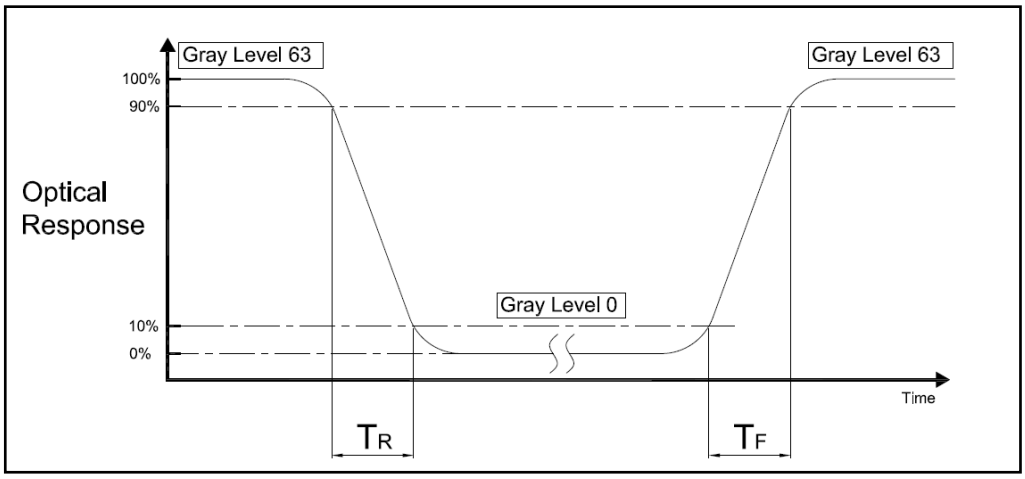

Note 3：Definition of Viewing Angle

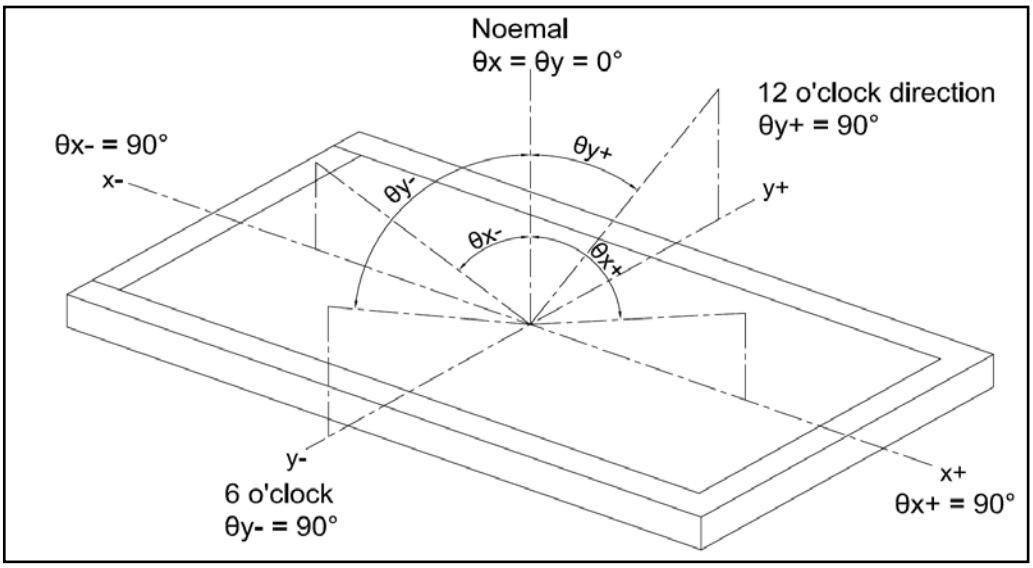

Note 4：Measurement Set-Up:

The LCD module should be stabilized at a given temperature for 20 minutes to avoid abrupt temperature change during measuring. In order stabilize the luminance, the measurement should be executed after lighting Backlight for 20 minutes in a windless room.

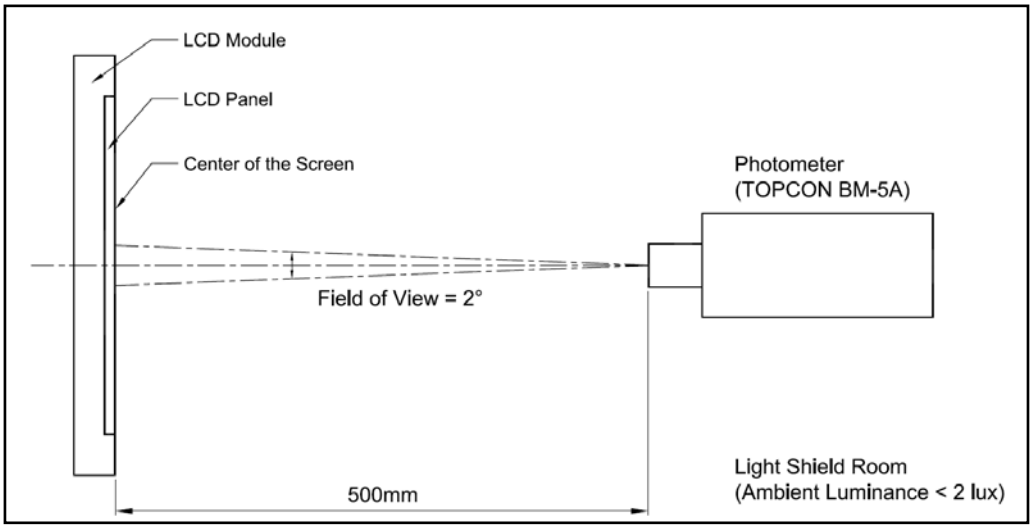

Note 5：

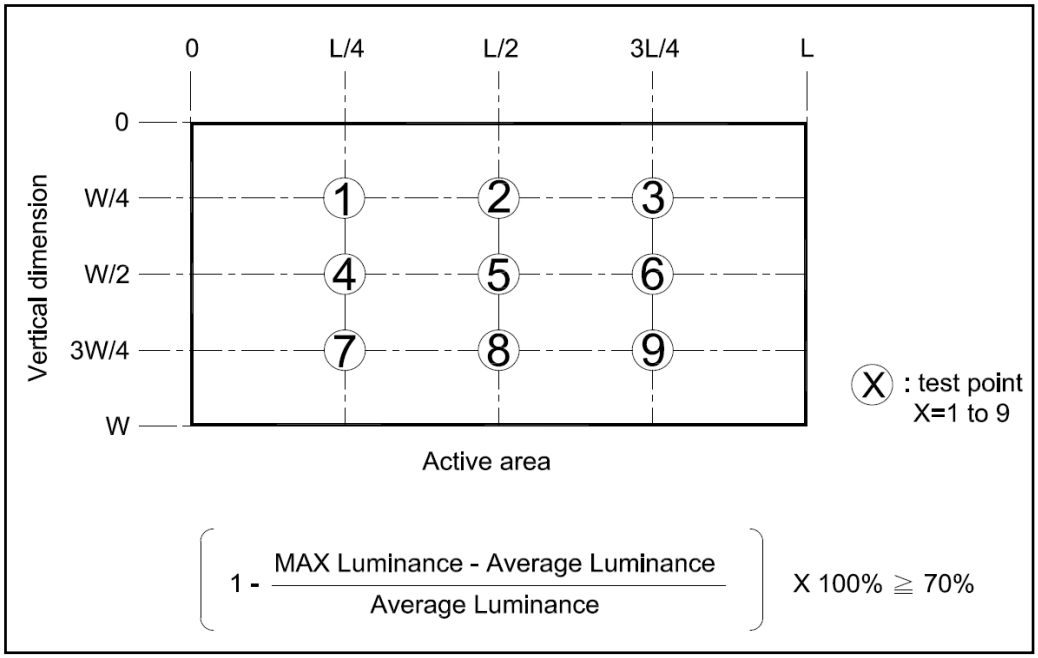
0
L/4
L/2
3L/4
L
0
W/4
W/2
3W/4
W
Vertical dimension
1
2
3
4
5
6
7
8
9
Active area
X : test point
X=1 to 9
1 - MAX Luminance - Average Luminance / Average Luminance X 100% ≧ 70%

9.TOUCH PANEL SPECIFICATIONS

9.1 ELECTRICAL CHARACTERISTICS OF TOUCH PANEL

ITEM		SPECIFICATION
(1)	Loop Resistance	X:300Ω~1000Ω,Y:100Ω~700Ω
(2)	Linearity	X≦1.5%,Y≦1.5%(see Note1) X≦3.0%,Y≦3.0%(After life test) Test power:250gf
(3)	Working Voltage	DC 7V or less
(4)	Insulation Resistance	10MΩ Min(DC 25V)
(5)	Chattering	20ms Max At connector pin

Note 1 Difference between actual voltage & theoretical voltage is an error at ant points.
Linearity is the value max. error voltage divided by voltage difference on active area inside 2mm.

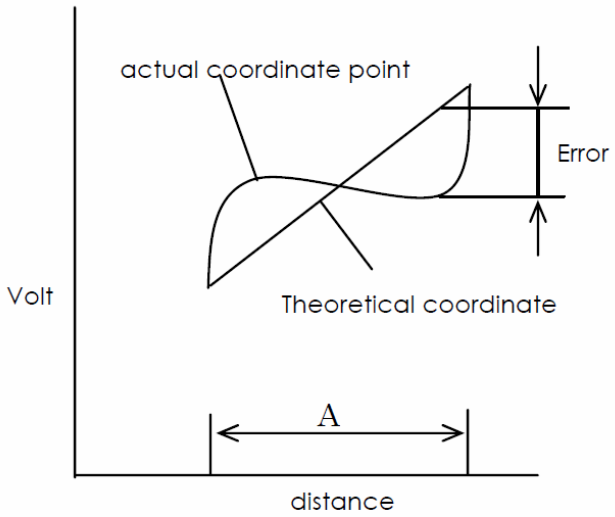

A: Guaranteed active area

9.2 TOUCH PANEL SCREEN

PIN NO.	DESCRIPTION
1	Y2
2	X2
3	Y1
4	X1

10. TIMING SPECIFICATIONS

10.1 POWER SIGNAL SEQUENCE

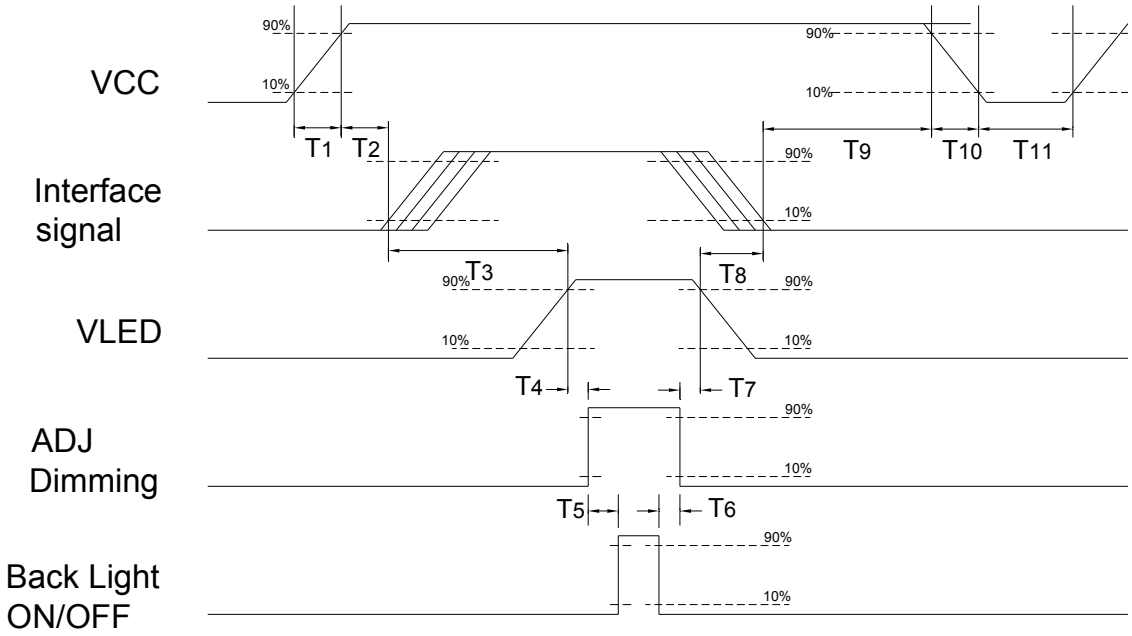

Power ON/OFF sequence timing

ITEM	MIN.	TYP.	MAX.	UNIT
T1	0.5	-	10	ms
T2	0	-	50	ms
T3	200	-	-	ms
T4	10	-	-	ms
T5	10	-	-	ms
T6	0	-	-	ms
T7	10	-	-	ms
T8	100	-	-	ms
T9	0	16	50	ms
T10	-	-	10	ms
T11	1000	-	-	ms

The above on/off sequence should be applied to avoid abnormal function in the display. Please make sure to turn off the power when you plug the cable into the input connector or pull the cable out of the connector.

10.2 THE INPUT DATA FORMAT

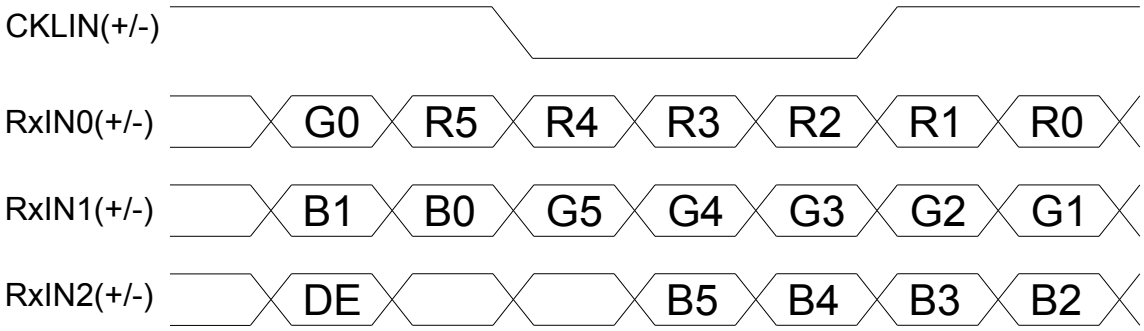

SIGNAL NAME	DESCRIPTION	REMARK
R5 R4 R3 R2 R1 R0	Red Data 5 Red Data 4 Red Data 3 Red Data 2 Red Data 1 Red Data 0	Red-pixel Data 6Bits LVDS input MSB：R5 ； LSB：R0
G5 G4 G3 G2 G1 G0	Green Data 5 Green Data 4 Green Data 3 Green Data 2 Green Data 1 Green Data 0	Green-pixel Data 6Bits LVDS input MSB：G5 ； LSB：G0
B5 B4 B3 B2 B1 B0	Blue Data 5 Blue Data 4 Blue Data 3 Blue Data 2 Blue Data 1 Blue Data 0	Blue-pixel Data 6Bits LVDS input MSB：B5 ； LSB：B0
RxCLKIN	LVDS Data Clock	
DE	Data Enable Signal	When the signal is high, the pixel data shall be valid to be displayed.

10.3 AC TIMING CHARATERISTICS

ITEM		SYMBOL	MIN.	TYP.	MAX.	UNIT	REMARK
Clock	Frequency	1/Tc	-	33.26	-	MHz	Note1
	Clk pulse duty	Tcwh	40	50	60	%	Note1
	Clk cycle time	Tcph	25	-	-	ns	Note1
Data	Setup time	Tdsu	6	-	-	ns	Note1
	Hold time	Tdhd	6	-	-	ns	Note1
ENAB signal	Setup time	Tesu	6	-	-	ns	Note1

Note 1: Frame rate is 60 Hz at 3.3V VCC

Clock and Data Timing Diagram

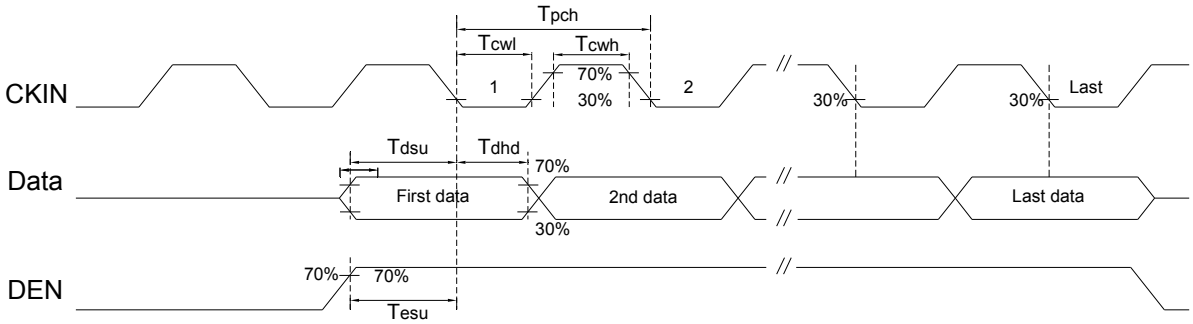

11. RELIABILITY TEST

ENVIRONMENTAL TEST				
NO.	ITEM	CONDITIONS	TIME PERIOD	REMARK
1	High Temperature Storage	70℃	96HRS	
2	Low Temperature Storage	-20℃	96HRS	
3	High Temperature Operation	60℃	96HRS	
4	Low Temperature Operation	-10℃	96HRS	
5	Temperature Cycle	-10℃←25℃→60℃ (30min) (5min) (30min)	10CYCLE	
6	High Temperature Humidity Storage	40℃ 90%RH (No condensation)	96HRS	

Note 1: a. The module should work properly.
b. Before and after function test, The difference of consumptive current. Should be within 10%

Note 2: a. The module should work properly.
b. The modlue won't be deformative, Color changeable or broken.
c. The modules can't be apart.

Note 3: a. Before cosmetic and function test, The product must have enough recovery time, At least 24 hours at room temperature.

12. LCM INSPECTION STANDARD

Inspection specifications refer ONation Corporation LCM INSPECTION STANDARD Document.
Document Number ：QT3-QC-A-I005

13. PACKAGE INFORMATION

LCM MODEL	LCM QTY. IN THE BOX	INNER BOX SIZE (mm)	WEIGHT	REMARK
OT070CGWDLT-00	TBD	TBD	TBD	

14.PRECAUTIONS FOR USE

14.1 SAFETY

(1) Do not swallow any liquid crystal, even if there is no proof that liquid crystal is poisonous.
(2) If the LCD panel breaks, be careful not to get liquid crystal to touch your skin.
(3) If skin is exposed to liquid crystal, wash the area thoroughly with alcohol or soap.

14.2 STORAGE CONDITIONS

(1) Store the panel or module in a dark place where the temperature is 23±5°C and the humidity is below 50±20%RH.
(2) Store in anti-static electricity container.
(3) Store in clean environment, free from dust, active gas, and solvent.
(4) Do not place the module near organics solvents or corrosive gases.
(5) Do not crush, shake, or jolt the module.

14.3 HANDLING PRECAUTIONS

(1) Avoid static electricity which can damage the CMOS LSI.
(2) The polarizing plate of the display is very fragile. So, please handle it very carefully.
(3) Do not give external shock.
(4) Do not apply excessive force on the surface.
(5) Do not wipe the polarizing plate with a dry cloth, as it may easily scratch the Surface of plate.
(6) Do not use ketonics solvent & Aromatic solvent, use with a soft cloth soaked with a cleaning naphtha solvent.
(7) Do not operate it above the absolute maximum rating.
(8) Do not remove the panel or frame from the module.
(9) When the module is assembled, it should be attached to the system firmly, Be careful not to twist and bend the module.
(10) Wipe off water droplets or oil immediately . If you leave the droplets for a long time, staining and discoloration may occur.
(11) If the liquid crystal material leaks from the panel, it should be kept away from the eyes or mouth. In case of contact with hands, legs or clothes, it must be washed away thoroughly with soap.

14.4 WARRANTY

(1) Acceptance inspection period
The period is within one month after the arrival of contracted commodity at the buyer's factory site.
(2) Applicable warrant period
The period is within 12 months since the date of shipping out under normal using and storage conditions.

ONation Corporation

TFT COLOR LCD MODULE

MODEL: OT070CGWDLT-00

WVGA
LVDS interface (1port)

Version: P0.1

Customer : _____

Approved By : _____

Date: _____

ONATION		
APPROVAL	**CHECKER**	**PREPARE**
	Josh	

All information is subject to change without notice.
Please confirm the sales representative before starting to design your system

ONation Corporation
All rights reserved 2014

C O N T E N T S

NO.	ITEM	PAGE
1	RECORD OF REVISION	0-1
2	MECHANICAL SPECIFICATIONS	1
3	OUTLINE DIMENSIONS	2
4	INTERFACE PIN CONNECTION	3
5	BLOCK DIAGRAM	4
6	ABSOLUTE MAXIMUM RATINGS	5
7	ELECTRICAL CHARACTERISTICS	6
8	OPTICAL CHARACTERISTICS	7~9
9	TOUCH PANEL SPECIFICATIONS	10
10	TIMING SPECIFICATIONS	11~13
11	RELIABILITY TEST	14
12	LCM INSPECTION STANDARD	15
13	PACKAGE INFORMATION	15
14	PRECAUTIONS FOR USE	16

1.RECORD OF REVISION

REV	DATE	PAGE	SUMMARY
0.1	2014.01.17	ALL	Preliminary specification was first issued.

2.MECHANICAL SPECIFICATIONS

(1)	Number Of Dots (Dots)	800(R.G.B) X 480
(2)	Module Size(mm)	165.0(H) X 106.4(V) X 6.85(D)
(3)	Active Area(mm)	152.4(H) X 91.44(V)
(4)	Pixel Pitch(mm)	0.1905 (H) X 0.1905(V)
(5)	LCD / Polarizer Model	TFT , Transmissive, Normally/ White, Anti-Glare
(6)	Backlight Color	White, LED
(7)	Viewing Direction	12 O'clock Horizontal：Right side 80°(typ.), Left side 80°(typ.) Vertical：Up side 80°(typ.), Down side 80°(typ.)
(8)	Gray Scale Inversion Direction	6 O'clock
(9)	Electrical Interface	LVDS Interface
(10)	Color Configuration	R.G.B Stripe
(11)	Module Weight(g)	150±5%

3. OUTLINE DIMENSIONS

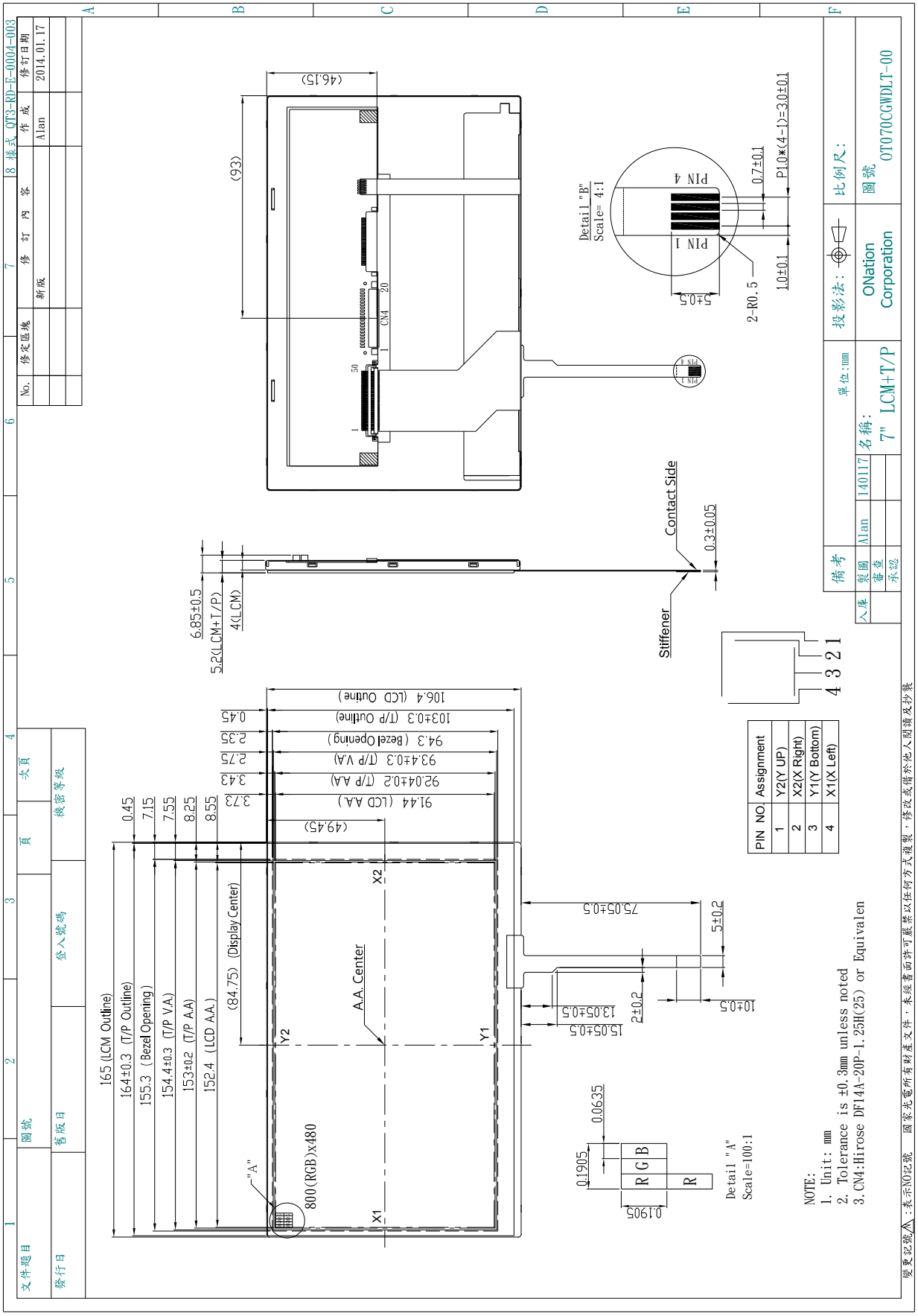

PIN NO.	Assignment
1	Y2(Y UP)
2	X2(X Right)
3	Y1(Y Bottom)
4	X1(X Left)

4. INTERFACE PIN CONNECTION

4.1 LCM PANEL DRIVING SECTION

CN1 Connector：Hirose DF14A-20P-1.25H(25) or Equivalen

Mating Connector：Hirose DF14-20S-1.25C or Equivalen

PIN NO.	SIGNAL	FUNCTION
1	VCC	Power Supply For Digital Circuit
2	VCC	Power Supply For Digital Circuit
3	GND	Ground
4	GND	Ground
5	RxIN0-	Differential Data Input, CH0(Negative)
6	RxIN0+	Differential Data Input, CH0(Positive)
7	GND	Ground
8	RxIN1-	Differential Data Input, CH1(Negative)
9	RxIN1+	Differential Data Input, CH1(Positive)
10	GND	Ground
11	RxIN2-	Differential Data Input, CH2(Negative)
12	RxIN2+	Differential Data Input, CH2(Positive)
13	GND	Ground
14	CLKIN-	Differential Clock Input(Negative)
15	CLKIN+	Differential Clock Input(Positive)
16	GND	Ground
17	VLED	Power Supply For LED Driver Circuit
18	VLED	Power Supply For LED Driver Circuit
19	GND	Ground
20	ADJ	Brightness Control For LED B/L

4.2 TOUCH PANEL SCREEN

PIN NO.	SIGNAL	FUNCTION	REMARK
1	Y2	TOUCH PANEL SIGNAL(Y-TOP)	
2	X2	TOUCH PANEL SIGNAL(X-Right)	
3	Y1	TOUCH PANEL SIGNAL(Y-Bottom)	
4	X1	TOUCH PANEL SIGNAL(X-Left)	

5. BLOCK DIAGRAM

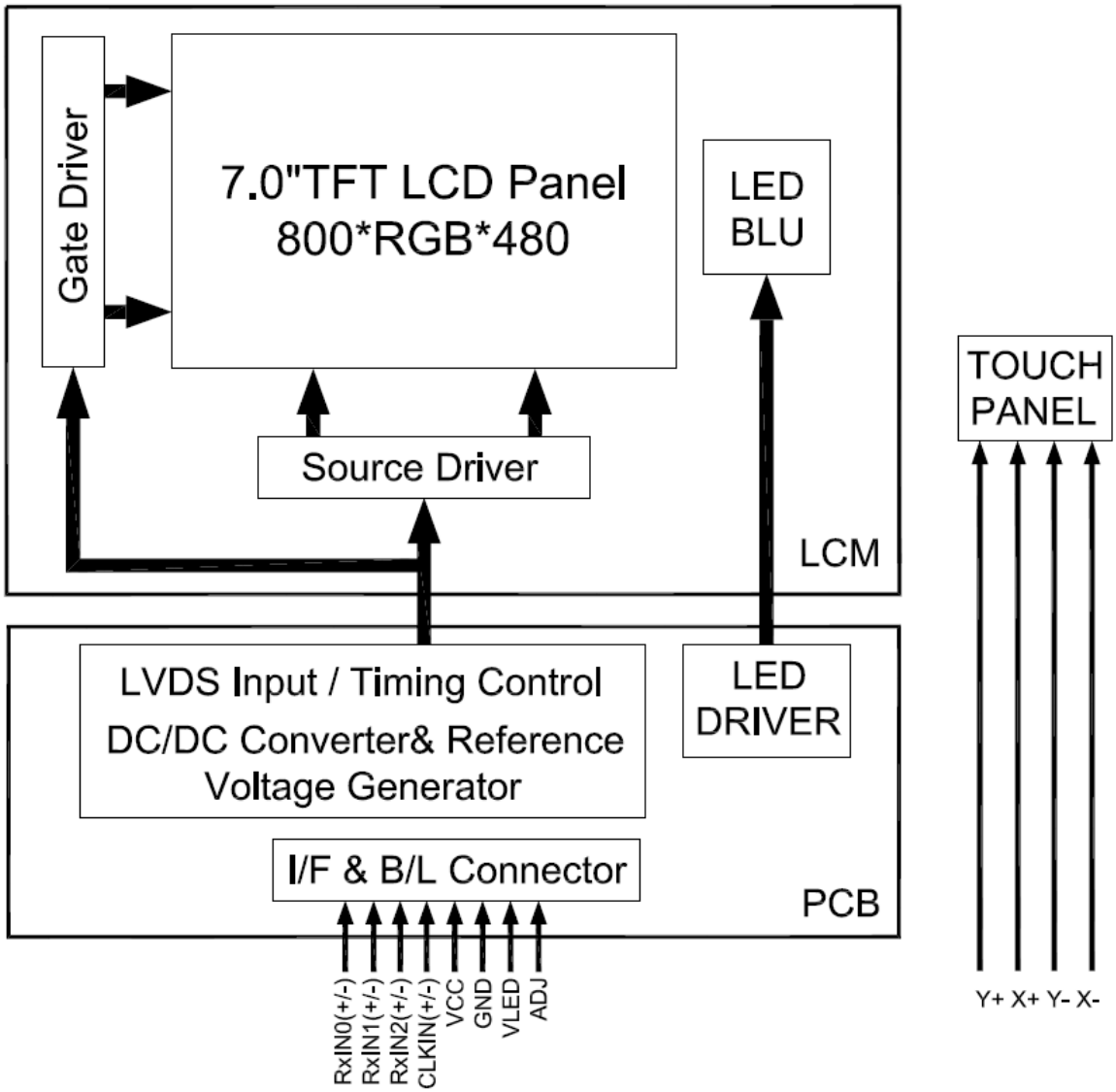

6. ABSOLUTE MAXIMUM RATINGS

6.1 ELECTRICAL ABSOLUTE MAXIMUM RATINGS

ITEM	SYMBOL	MIN.	MAX.	UNIT	REMARK
Power Supply Voltage	VCC	-0.3	5.0	V	
	VLED	-0.3	6.0	V	
	ADJ	-0.3	6.0	V	

Note: The absolute maximum rating values of this product not allowed to be exceeded at any times. Should be module be used with any of absolute maximum ratings exceeded. The characteristics of the module may not be recovered, or in an extreme case, the module may be permanently destroyed.

6.2 ENVIRONMENTAL ABSOLUTE MAXIMUM RATINGS

ITEM	OPERATING		STORAGE		REMARK
	MIN.	MAX.	MIN.	MAX.	
Ambient Temperature(℃)	-10	60	-20	70	Note 1,2
Humidity(% RH)	Note 3		Note 3		Note 3

Note 1 : The response time will become lower when operated at low temperature.

Note 2 : Background color changes slightly depending on ambient temperature.

Note 3 : Operation Ta=40℃ & RH=90% ≦ 96Hrs.

7. ELECTRICAL CHARACTERISTICS

7.1 ELECTRICAL CHARACTERISTICS OF LCD

Ta=25℃

ITEM	SYMBOL	MIN.	TYP.	MAX.	UNIT	REMARK
Power Voltage For LCD	VCC	3.0	3.3	3.6	V	
	ICC	-	200	250	mA	Note 1

Note 1：Test condition：VCC=3.3V；Test Pattern：Black.

7.2 BACKLIGHT UNITS

Ta=25℃

ITEM	SYMBOL	MIN.	TYP.	MAX.	UNIT
LED Driving Voltage	VLED	3.0	5.0	5.5	V
	ILED (VLED=5V)	-	400	550	A
ADJ Input Analog Dimming Voltage	VIH	2.0	-	-	V
ADJ Input PWM Dimming Voltage	VIL	-	-	0.8	V
ADJ frequency	-	20	-	200	KHz

Note 1:The figure below shows the connection of backlight LED.

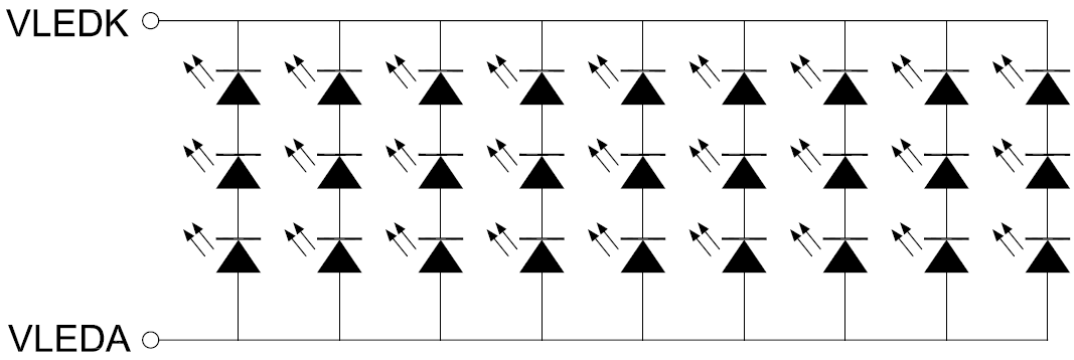

8. OPTICAL CHARACTERISTICS

Ta=25℃

ITEM		SYMBOL	CONDITIONS	MIN.	TYP.	MAX.	UNIT	REMARK
Contrast Ratio		CR	Viewing Normal Angle Θx=Θy=0°	(250)	(300)	-	-	Note 1
Response Time		TR		-	5	10	ms	Note 2
		TF		-	15	20	ms	
Chromaticity	White	x		(0.28)	(0.33)	(0.38)	-	Note 4
		y		(0.33)	(0.38)	(0.43)	-	
Viewing Angle	Hor.	θx+	Viewing Angle Θx=Θy=0° CR≧10	70	80	-	Deg.	Note 3
		θx -		70	80	-		
	Ver.	θy+		70	80	-		
		θy -		70	80	-		
Luminance		L	PWM=100%	(220)	(280)	-	cd/m2	-
Uniformity		-	-	70	-	-	%	Note 5

Note 1：Definition of Contrast Ratio (CR)：

The contrast ratio can be calculated by the following expression.

Contrast Ratio (CR) = L63/L0

L63：Luminance of gray level 63

L0：Luminance of gray level 0

CR = CR(5)

CR(X) is corresponding to the Contrast Ratio of the point X at Figure in Note 5

Note 2：Definition of Response Time (TR.TF)

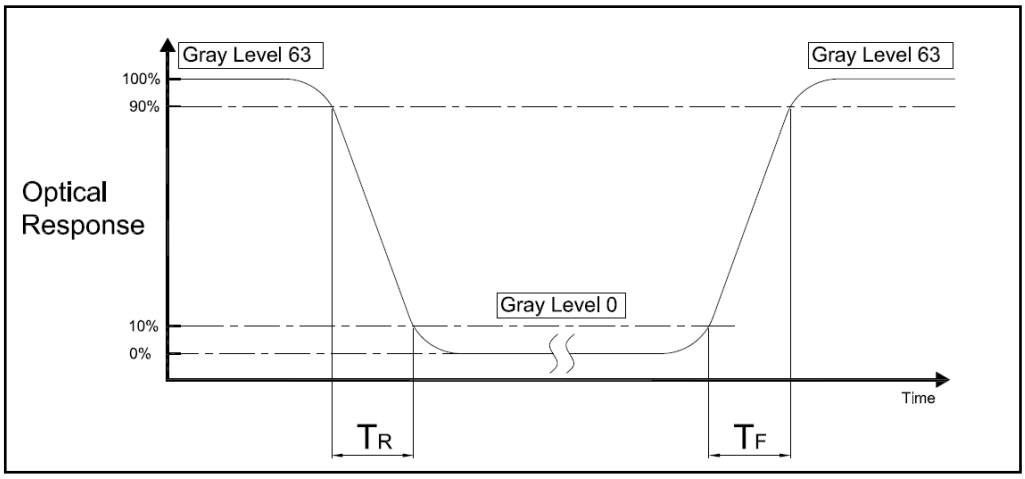

Note 3：Definition of Viewing Angle

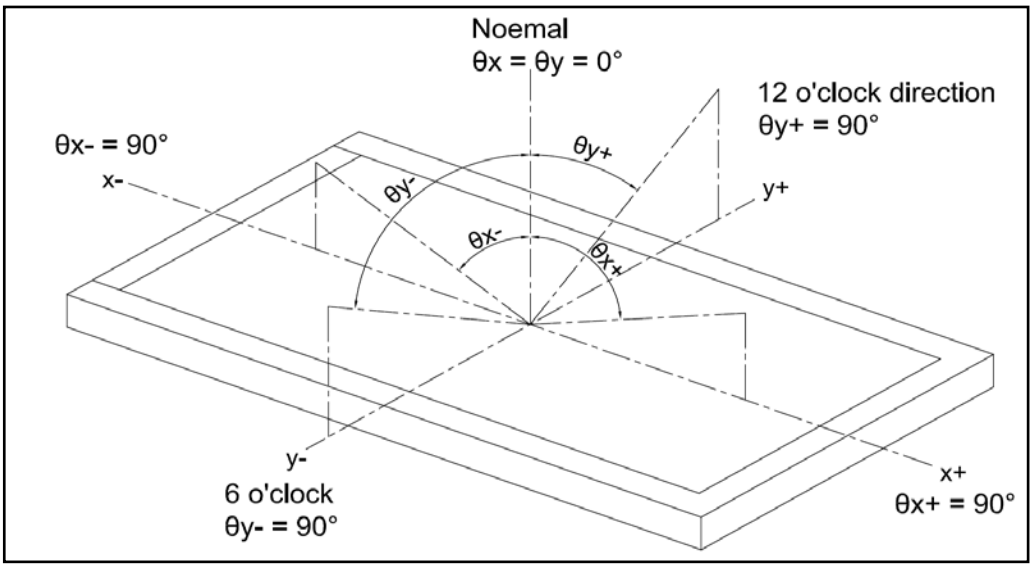

Note 4：Measurement Set-Up:

The LCD module should be stabilized at a given temperature for 20 minutes to avoid abrupt temperature change during measuring. In order stabilize the luminance, the measurement should be executed after lighting Backlight for 20 minutes in a windless room.

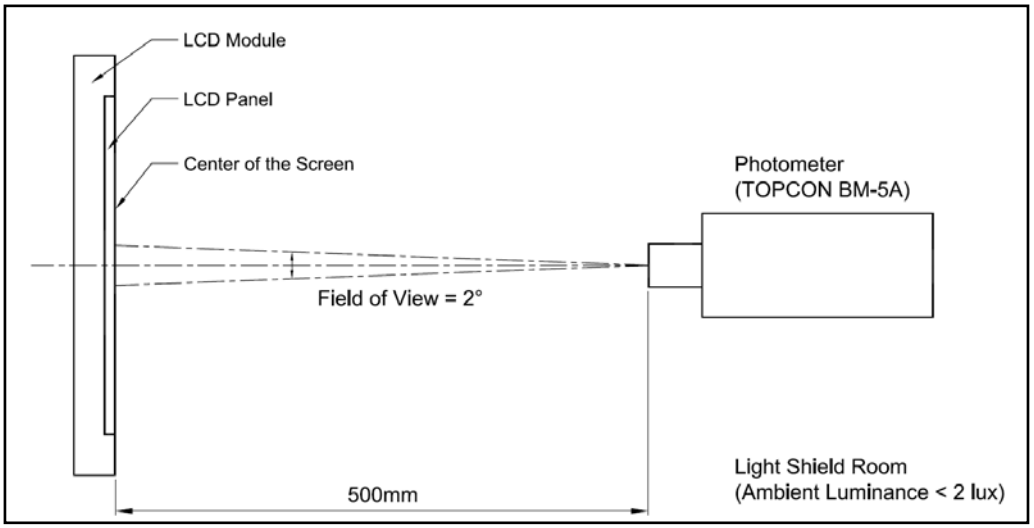

Note 5：

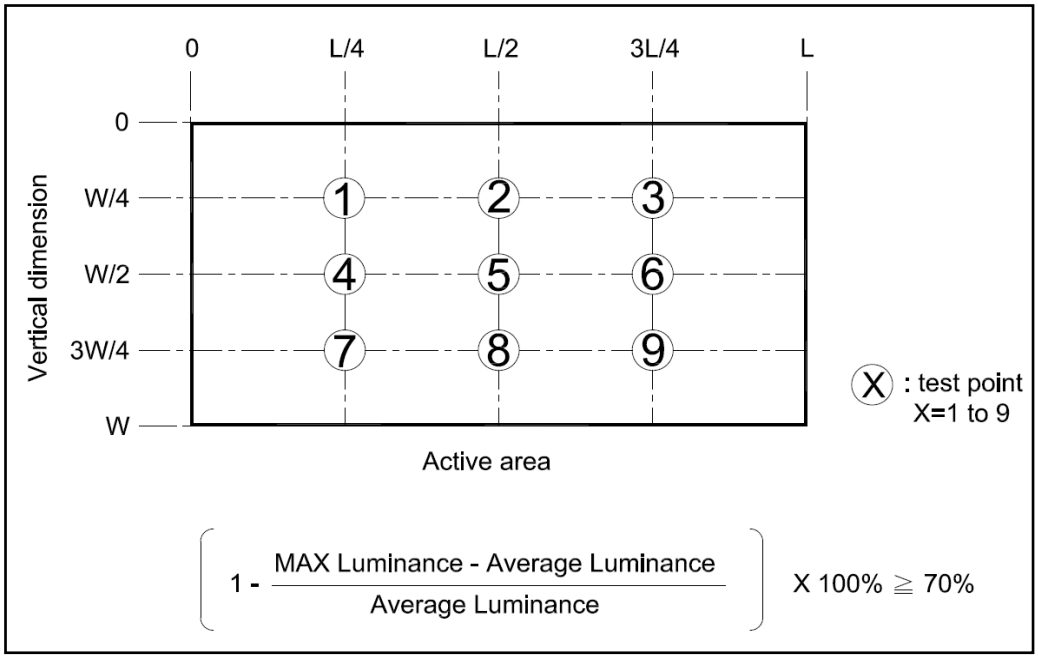
0
L/4
L/2
3L/4
L
0
W/4
W/2
3W/4
W
Vertical dimension
1
2
3
4
5
6
7
8
9
Active area
X : test point
X=1 to 9
1 - MAX Luminance - Average Luminance / Average Luminance X 100% ≧ 70%

9.TOUCH PANEL SPECIFICATIONS

9.1 ELECTRICAL CHARACTERISTICS OF TOUCH PANEL

ITEM		SPECIFICATION
(1)	Loop Resistance	X:300Ω~1000Ω,Y:100Ω~700Ω
(2)	Linearity	X≦1.5%,Y≦1.5%(see Note1) X≦3.0%,Y≦3.0%(After life test) Test power:250gf
(3)	Working Voltage	DC 7V or less
(4)	Insulation Resistance	10MΩ Min(DC 25V)
(5)	Chattering	20ms Max At connector pin

Note 1 Difference between actual voltage & theoretical voltage is an error at ant points.
Linearity is the value max. error voltage divided by voltage difference on active area inside 2mm.

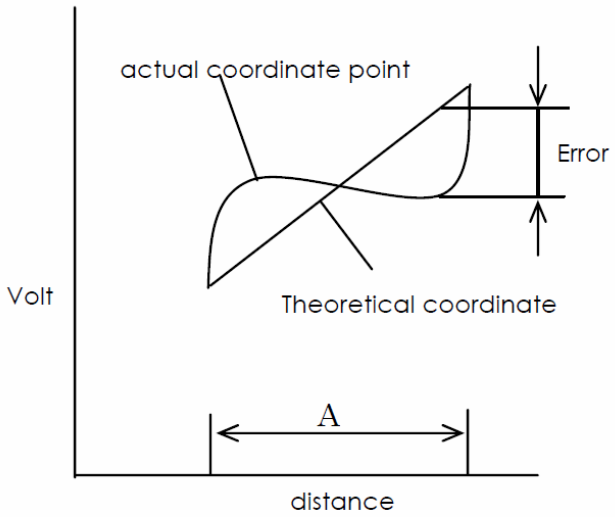

A: Guaranteed active area

9.2 TOUCH PANEL SCREEN

PIN NO.	DESCRIPTION
1	Y2
2	X2
3	Y1
4	X1

10. TIMING SPECIFICATIONS

10.1 POWER SIGNAL SEQUENCE

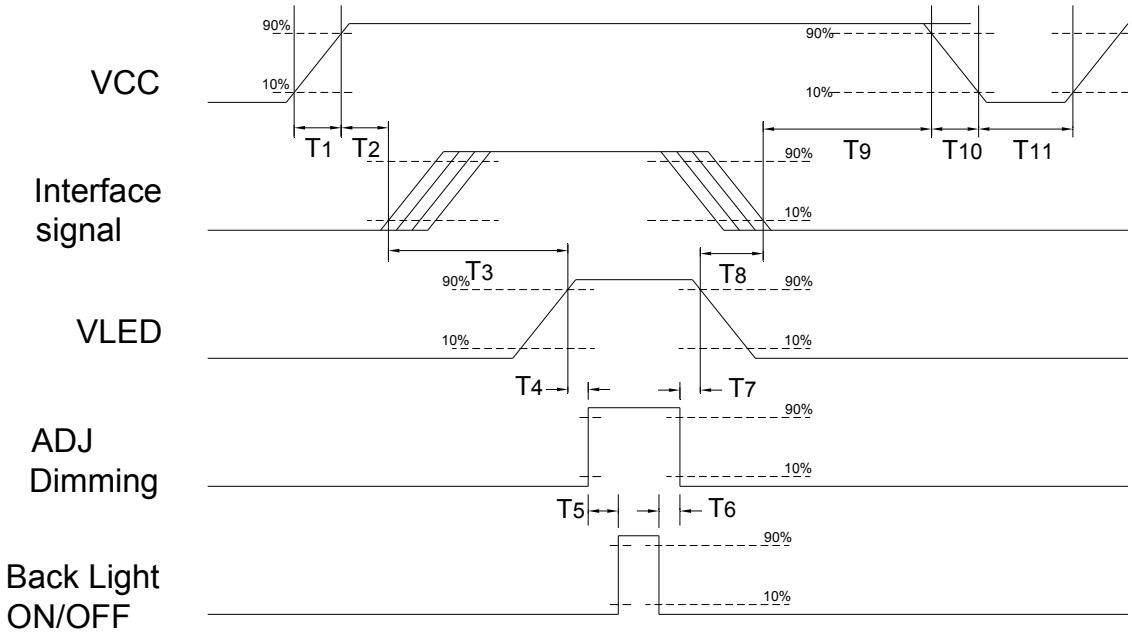

Power ON/OFF sequence timing

ITEM	MIN.	TYP.	MAX.	UNIT
T1	0.5	-	10	ms
T2	0	-	50	ms
T3	200	-	-	ms
T4	10	-	-	ms
T5	10	-	-	ms
T6	0	-	-	ms
T7	10	-	-	ms
T8	100	-	-	ms
T9	0	16	50	ms
T10	-	-	10	ms
T11	1000	-	-	ms

The above on/off sequence should be applied to avoid abnormal function in the display. Please make sure to turn off the power when you plug the cable into the input connector or pull the cable out of the connector.

10.2 THE INPUT DATA FORMAT

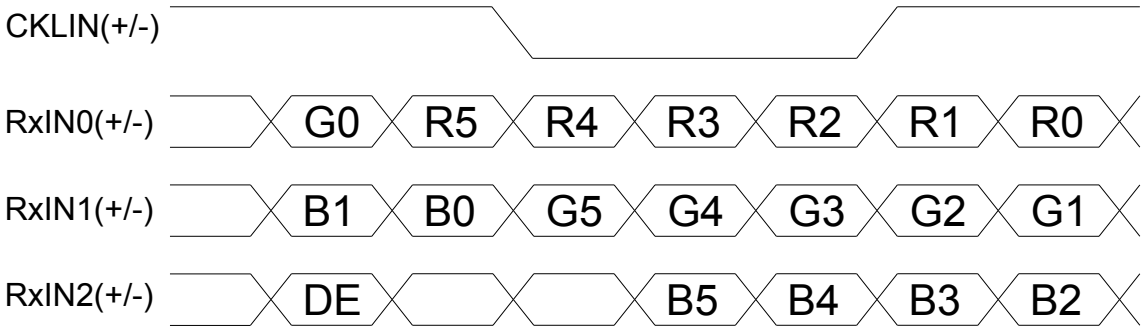

SIGNAL NAME	DESCRIPTION	REMARK
R5 R4 R3 R2 R1 R0	Red Data 5 Red Data 4 Red Data 3 Red Data 2 Red Data 1 Red Data 0	Red-pixel Data 6Bits LVDS input MSB：R5 ； LSB：R0
G5 G4 G3 G2 G1 G0	Green Data 5 Green Data 4 Green Data 3 Green Data 2 Green Data 1 Green Data 0	Green-pixel Data 6Bits LVDS input MSB：G5 ； LSB：G0
B5 B4 B3 B2 B1 B0	Blue Data 5 Blue Data 4 Blue Data 3 Blue Data 2 Blue Data 1 Blue Data 0	Blue-pixel Data 6Bits LVDS input MSB：B5 ； LSB：B0
RxCLKIN	LVDS Data Clock	
DE	Data Enable Signal	When the signal is high, the pixel data shall be valid to be displayed.

10.3 AC TIMING CHARATERISTICS

ITEM		SYMBOL	MIN.	TYP.	MAX.	UNIT	REMARK
Clock	Frequency	1/Tc	-	33.26	-	MHz	Note1
	Clk pulse duty	Tcwh	40	50	60	%	Note1
	Clk cycle time	Tcph	25	-	-	ns	Note1
Data	Setup time	Tdsu	6	-	-	ns	Note1
	Hold time	Tdhd	6	-	-	ns	Note1
ENAB signal	Setup time	Tesu	6	-	-	ns	Note1

Note 1: Frame rate is 60 Hz at 3.3V VCC

Clock and Data Timing Diagram

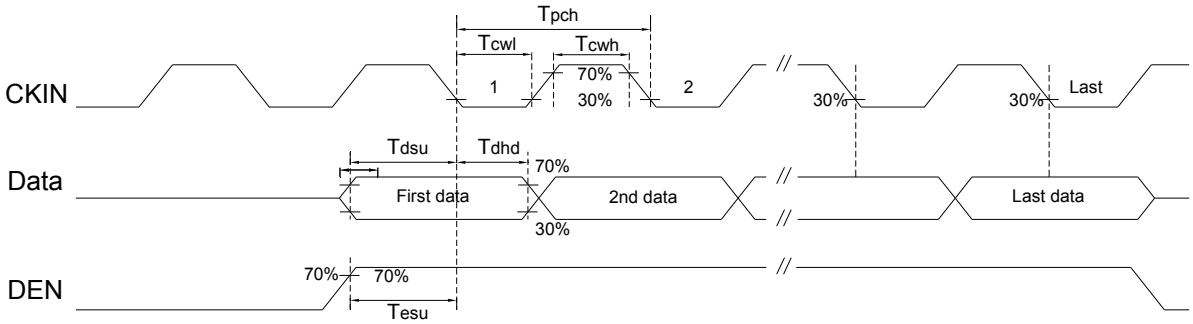

11. RELIABILITY TEST

ENVIRONMENTAL TEST				
NO.	ITEM	CONDITIONS	TIME PERIOD	REMARK
1	High Temperature Storage	70℃	96HRS	
2	Low Temperature Storage	-20℃	96HRS	
3	High Temperature Operation	60℃	96HRS	
4	Low Temperature Operation	-10℃	96HRS	
5	Temperature Cycle	-10℃←25℃→60℃ (30min) (5min) (30min)	10CYCLE	
6	High Temperature Humidity Storage	40℃ 90%RH (No condensation)	96HRS	

Note 1: a. The module should work properly.
b. Before and after function test, The difference of consumptive current. Should be within 10%

Note 2: a. The module should work properly.
b. The modlue won't be deformative, Color changeable or broken.
c. The modules can't be apart.

Note 3: a. Before cosmetic and function test, The product must have enough recovery time, At least 24 hours at room temperature.

12. LCM INSPECTION STANDARD

Inspection specifications refer ONation Corporation LCM INSPECTION STANDARD Document.
Document Number ：QT3-QC-A-I005

13. PACKAGE INFORMATION

LCM MODEL	LCM QTY. IN THE BOX	INNER BOX SIZE (mm)	WEIGHT	REMARK
OT070CGWDLT-00	TBD	TBD	TBD	

14.PRECAUTIONS FOR USE

14.1 SAFETY

(1) Do not swallow any liquid crystal, even if there is no proof that liquid crystal is poisonous.
(2) If the LCD panel breaks, be careful not to get liquid crystal to touch your skin.
(3) If skin is exposed to liquid crystal, wash the area thoroughly with alcohol or soap.

14.2 STORAGE CONDITIONS

(1) Store the panel or module in a dark place where the temperature is 23±5°C and the humidity is below 50±20%RH.
(2) Store in anti-static electricity container.
(3) Store in clean environment, free from dust, active gas, and solvent.
(4) Do not place the module near organics solvents or corrosive gases.
(5) Do not crush, shake, or jolt the module.

14.3 HANDLING PRECAUTIONS

(1) Avoid static electricity which can damage the CMOS LSI.
(2) The polarizing plate of the display is very fragile. So, please handle it very carefully.
(3) Do not give external shock.
(4) Do not apply excessive force on the surface.
(5) Do not wipe the polarizing plate with a dry cloth, as it may easily scratch the Surface of plate.
(6) Do not use ketonics solvent & Aromatic solvent, use with a soft cloth soaked with a cleaning naphtha solvent.
(7) Do not operate it above the absolute maximum rating.
(8) Do not remove the panel or frame from the module.
(9) When the module is assembled, it should be attached to the system firmly, Be careful not to twist and bend the module.
(10) Wipe off water droplets or oil immediately . If you leave the droplets for a long time, staining and discoloration may occur.
(11) If the liquid crystal material leaks from the panel, it should be kept away from the eyes or mouth. In case of contact with hands, legs or clothes, it must be washed away thoroughly with soap.

14.4 WARRANTY

(1) Acceptance inspection period
The period is within one month after the arrival of contracted commodity at the buyer's factory site.
(2) Applicable warrant period
The period is within 12 months since the date of shipping out under normal using and storage conditions.