☐**Preliminary Specifications**
■**Final Specifications**

| | |
|---|---|
| **Module** | 15.6 Inch Color TFT-LCD |
| **Model Name** | G156HAB02.4 |
| **Note** | oTP display |

| | |
|---|---|
| **Customer** **Date**<br><br>**Checked & Approved by**<br><br>_____ _____ | **Approved by** **Date**<br><br>Sean Lin 2020/9/9<br><br>**Prepared by**<br><br>CH Tsai 2020/9/9 |
| Customer's sign back page | General Display Business Unit / AU Optronics corporation |

AUO Confidential

# Contents

**1. Operating Precautions ..... 4**
**2. General Description ..... 5**
2.1 Display Characteristics ..... 5
2.2 Touch Characteristics ..... 6
2.3 Optical Characteristics ..... 6
**3. Functional Block Diagram ..... 10**
**4. Absolute Maximum Ratings ..... 11**
4.1 Absolute Ratings of TFT LCD Module ..... 11
4.2 Absolute Ratings of Touch Sensor Module ..... 11
4.3 Absolute Ratings of Environment ..... 11
**5. Electrical Characteristics ..... 12**
5.1 TFT LCD Module ..... 12
5.2 Backlight Unit ..... 15
5.3 Touch Sensor Module ..... 15
**6. Signal Characteristic ..... 16**
6.1 Pixel Format Image ..... 16
6.2 Scanning Direction ..... 16
6.3 Signal Description ..... 17
6.4 Interface Timing ..... 19
6.5 Power ON/OFF Sequence ..... 21
**7. Reliability Test Criteria ..... 24**
7.1 Vibration Test ..... 24
7.2 Shock Test ..... 24
7.3 Reliability Test ..... 24
**8. Mechanical Characteristics ..... 25**
8.1 LCM Outline Dimension (Front View and back view) ..... 25
**9. Label and Packaging ..... 27**
9.1 Shipping Label (on the rear side of TFT-LCD display) ..... 27
9.2 Carton Package ..... 28
**10. Safety ..... 30**
10.1 Sharp Edge Requirements ..... 30
10.2 Materials ..... 30
10.3 Capacitors ..... 30
10.4 National Test Lab Requirement ..... 30

AUO Confidential

# Record of Revision

| Version | Date (yyyy/m/d) | Page | Old description | New Description |
|---|---|---|---|---|
| 0.1 | 2019/6/17 | All | First Edition | |
| 0.2 | 2019/7/5 | 18 | | 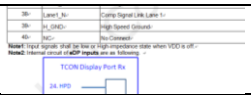 |
| 0.3 | 2019/9/4 | 26 | 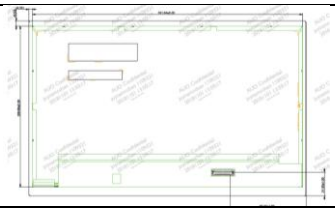 | 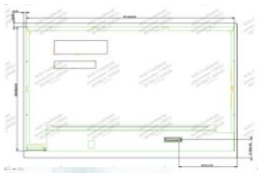 |
| 0.4 | 2019/11/8 | | G156HAB02.2 is designed for a display unit of notebook style personal computer and industrial machine. | G156HAB02.4 is designed for a display unit of notebook style personal computer and industrial machine. |
| 1.1 | 2020/9/9 | 5 | Response Time: [ms] 25 Typ.<br>Nominal Input Voltage VDD: [Volt] +3.3 Typ.<br>Power Consumption: [Watt] 8.15 max.<br>Weight: [Grams] 818 Max. | Nominal Input Voltage VDD: [Volt] +3.3 typ.<br>Power Consumption: [Watt] 8.26 max.<br>Weight: [Grams] 816 Max.<br>Min. Typ. Max. |
| | | 11 | 4.2 Absolute Ratings of Touch Sensor Module<br>Item: Touch Sensor Module Power Voltage; Symbol: VTSP; Min: -0.3; Max: 7.0; Unit: [Volt] | 4.2 Absolute Ratings of Touch Sensor Module<br>Item: Touch Sensor Module Power Voltage; Symbol: VTSP; Min: -0.3; Max: 6.0; Unit: [Volt] |
| | | 18 | 26: LCD GND: LCD logic and driver ground<br>27: LCD_Self_Test: LCD Panel Self Test Enable | 26: LCD GND: LCD logic and driver ground<br>27: LCD_Self_Test: No connect(Reverse for LCD panel shelf test Enable)<br>28: LCD_VCC: LCD logic and driver power<br>29: LCD_VCC: LCD logic and driver power |

AUO Confidential

## 1. Operating Precautions

1) Since front polarizer is easily damaged, please be cautious and not to scratch it.
2) Be sure to turn off power supply when inserting or disconnecting from input connector.
3) Wipe off water drop immediately. Long contact with water may cause discoloration or spots.
4) When the panel surface is soiled, wipe it with absorbent cotton or soft cloth.
5) Since the panel is made of glass, it may be broken or cracked if dropped or bumped on hard surface.
6) Since CMOS LSI is used in this module, take care of static electricity and insure human earth when handling.
7) Do not open nor modify the module assembly.
8) Do not press the reflector sheet at the back of the module to any direction.
9) In case if a module has to be put back into the packing container slot after it was taken out from the container, do not press the center of the LED Reflector edge. Instead, press at the far ends of the LED Reflector edge softly. Otherwise the TFT Module may be damaged.
10) At the insertion or removal of the Signal Interface Connector, be sure not to rotate nor tilt the Interface Connector of the TFT Module.
11) TFT-LCD Module is not allowed to be twisted & bent even force is added on module in a very short time. Please design your display product well to avoid external force applying to module by end-user directly.
12) Small amount of materials without flammability grade are used in the TFT-LCD module. The TFT-LCD module should be supplied by power complied with requirements of Limited Power Source (IEC60950-1 or UL60950-1), or be applied exemption.
13) Severe temperature condition may result in different luminance, response time.
14) Continuous operating TFT-LCD Module under high temperature environment may accelerate LED light bar exhaustion and reduce luminance dramatically.
15) The data on this specification sheet is applicable when TFT-LCD module is placed in landscape position.
16) Continuous displaying fixed pattern may induce image sticking. It’s recommended to use screen saver or moving content periodically if fixed pattern is displayed on the screen.

AUO Confidential

# 2. General Description

G156HAB02.4 is a Color Active Matrix Liquid Crystal Display composed of a TFT-LCD display, a driver circuit, and a LED backlight system. The screen format is intended to support 16:9 FHD (1920(H) x 1080(V)) screen and 16.2M colors (RGB 6-bits+FRC) with LED backlight driving circuit. All input signals are eDP (Embedded DisplayPort) interface compatible.

G156HAB02.4 is designed for a display unit of notebook style personal computer and industrial machine.

## 2.1 General Characteristics

The following items are characteristics summary on the table under 25 ℃ condition:

| Items | Unit | Specifications | | | |
|---|---|---|---|---|---|
| Screen Diagonal | [mm] | 15.6” | | | |
| Active Area | [mm] | 344.16 x 193.59 | | | |
| Pixels H x V | | 1920x3(RGB) x 1080 | | | |
| Pixel Pitch | [mm] | 0.17925 x 0.17925 | | | |
| Pixel Format | | R.G.B. Vertical Stripe | | | |
| Display Mode | | Normally Black | | | |
| Response Time | [ms] | 25 Typ. | | | |
| Nominal Input Voltage VDD | [Volt] | +3.3 Typ. | | | |
| Power Consumption | [Watt] | 8.26 max | | | |
| Weight | [Grams] | 810 Max. | | | |
| Physical Size **(Total solution, cover lens included)** | [mm] | | Min. | Typ. | Max. |
| | | Length | 360.8 | 361 | 361.2 |
| | | Width | 226.8 | 227 | 227.2 |
| | | Thickness | | | 7.75 |
| Electrical Interface | | 2 Lane eDP1.2 | | | |
| Surface Treatment_LCD | | HC | | | |
| Surface Treatment_Cover lens | | None | | | |
| Support Color | | 16.2M colors ( RGB 6-bit +FRC) | | | |
| Temperature Range<br>Operating<br>Storage (Non-Operating) | <br>[$^{o}$C]<br>[$^{o}$C] | <br>0 to +50<br>-20 to +60 | | | |
| RoHS Compliance | | RoHS Compliance | | | |

AUO Confidential

## 2.2 Touch Characteristics

The following items are characteristics summary on the table under 25 °C condition:

| Item | | Unit | Specifications |
|---|---|---|---|
| Type of Touch Sensor | | | Projective Capacity Touch (on-cell touch) |
| Cover Lens | Outline Dimension | [mm] | 361 (H) x 227 (V) (typ) |
| | Material | | CS Soda-lime |
| | Thickness | [mm] | 1.1 |
| | Visual Area | [mm] | 345.55 (H) x 194.98 (V) |
| Touch Sensor | Outline Dimension | | on cell touch |
| | Thickness | | on cell touch |
| | Active Area | | 346.36 x 195.79 |
| Touch Controller | | | EETI 80H84 |
| Channel (X * Y) | | [ch] | 82 (Rx)* 46(Tx) |
| Interface | | | USB |
| Surface Hardness | | [H] | 5H |
| Multi-Touch Point | | Points | 10 |
| Single/Multi-points Accuracy | | [mm] | Follow Win10 |
| Linearity | | [mm] | Follow Win10 |
| The smallest distance between 2 points | | [mm] | Follow Win10 |
| Report Rate | | | Follow Win10 |
| OS support | | | Win 7, Win 8, Win10 |

**Note1**. Driver is required in Win7/8/10 under mouse emulation mode

## 2.3 Optical Characteristics

The optical characteristics are measured under stable conditions at 25℃ (Room Temperature):

| Item | Unit | Conditions | Min. | Typ. | Max. | Note |
|---|---|---|---|---|---|---|
| White Luminance | [cd/m2] | $I_{LED}$=40mA(center point) | 320 | 400 | - | 1 |
| Uniformity | % | 5 Points | 75 | 80 | - | 2, 3 |
| Contrast Ratio | | | - | 800 | - | 4 |
| Response Time | [msec] | Rising | | | | 5 |
| | | Falling | | | | |
| | | Raising + Falling | - | 25 | 35 | |
| Viewing Angle | [degree]<br>[degree] | Horizontal (Right)<br>CR = 10 (Left) | -<br>- | 89<br>89 | -<br>- | 6 |

AUO Confidential

| | | | | | | |
|---|---|---|---|---|---|---|
| | [degree]<br>[degree] | Vertical (Upper)<br>CR = 10 (Lower) | -<br>- | 89<br>89 | -<br>- | |
| Color / Chromaticity Coordinates (CIE 1931) | | Red x | 0.530 | 0.580 | 0.630 | |
| | | Red y | 0.290 | 0.340 | 0.390 | |
| | | Green x | 0.286 | 0.336 | 0.386 | |
| | | Green y | 0.535 | 0.585 | 0.635 | |
| | | Blue x | 0.109 | 0.159 | 0.209 | |
| | | Blue y | 0.082 | 0.132 | 0.182 | |
| | | White x | 0.263 | 0.313 | 0.363 | |
| | | White y | 0.279 | 0.329 | 0.379 | |
| Color Gamut | % | | | 45 | - | |

**Note 1**: Measurement method

Equipment Pattern Generator, Power Supply, Digital Voltmeter, Luminance meter (SR_3 or equivalent)

Aperture 1° with 50cm viewing distance

Test Point Center

Environment *< 1 lux*

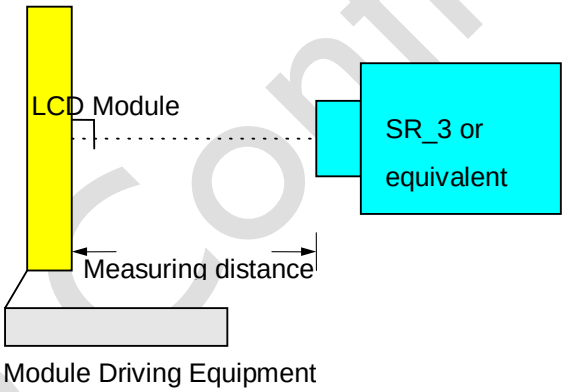


**Note 2**: Definition of 5 points position

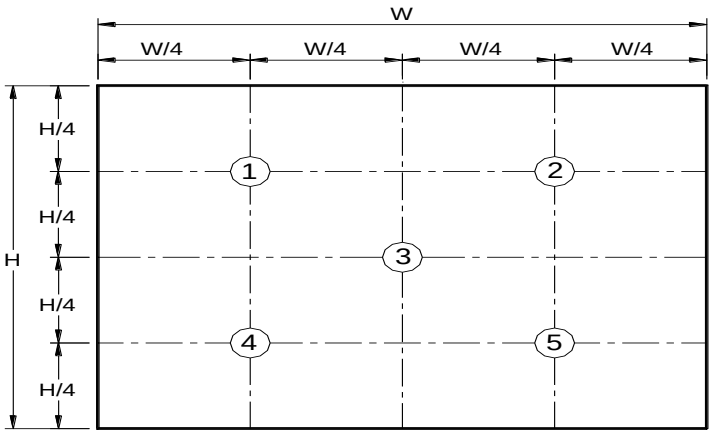


AUO Confidential

**Note 3**: The luminance uniformity of 5 points is defined by dividing the minimum luminance values by the maximum test point luminance

$$\delta_{W5} = \frac{\text{Minimum Brightness of five points}}{\text{Maximum Brightness of five points}}$$

**Note 4**： Definition of cross talk (CT)

$CT = | Y_B – Y_A | / Y_A \times 100$ (%)

Where

$Y_A$ = Luminance of measured location without gray level 0 pattern (cd/m2)

$Y_B$ = Luminance of measured location with gray level 0 pattern (cd/m2)

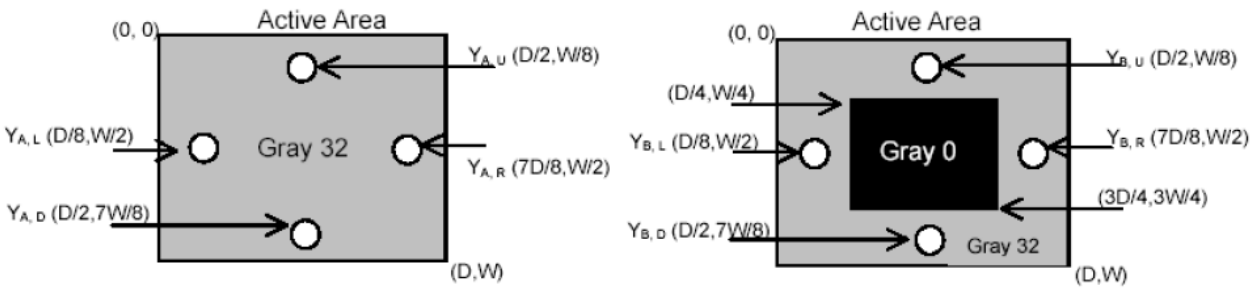


**Note 5**: Definition of response time:

The output signals of photo detector are measured when the input signals are changed from “White” to “Black” (falling time) and from “Black” to “White” (rising time), respectively. The response time interval is between 10% and 90% of amplitudes. Please refer to the figure as below.

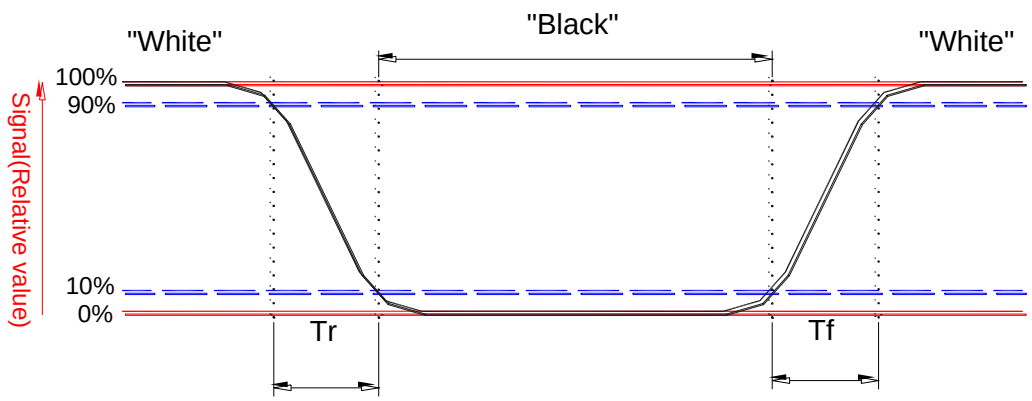

**Note6**: Definition of viewing angle

Viewing angle is the measurement of contrast ratio ≧10, at the screen center, over a 180° horizontal and 180° vertical range (off-normal viewing angles). The 180° viewing angle range is broken down as below: 90° (θ ) horizontal left and right, and 90° (Φ ) vertical high (up) and low (down). The measurement direction is typically perpendicular to the display surface with the screen rotated to its center to develop the desired measurement viewing angle.

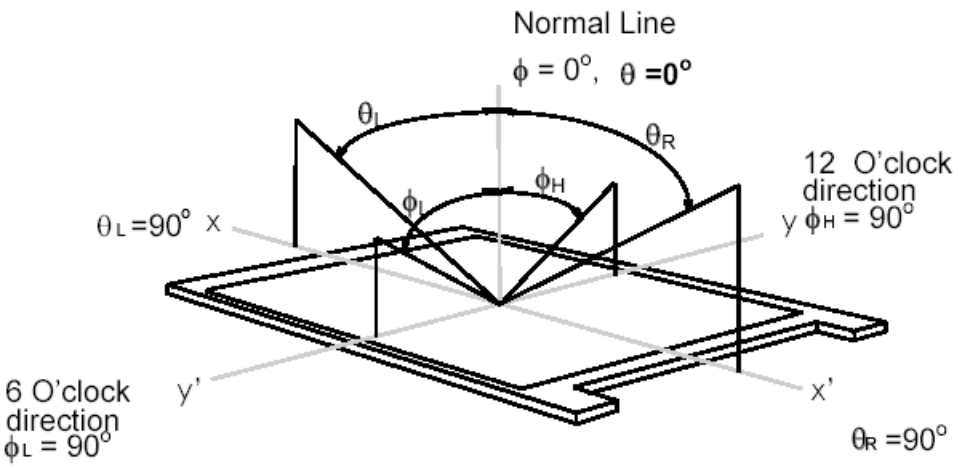

## 3. Functional Block Diagram

The following diagram shows the functional block of the 15.6 inch color TFT/LCD module:

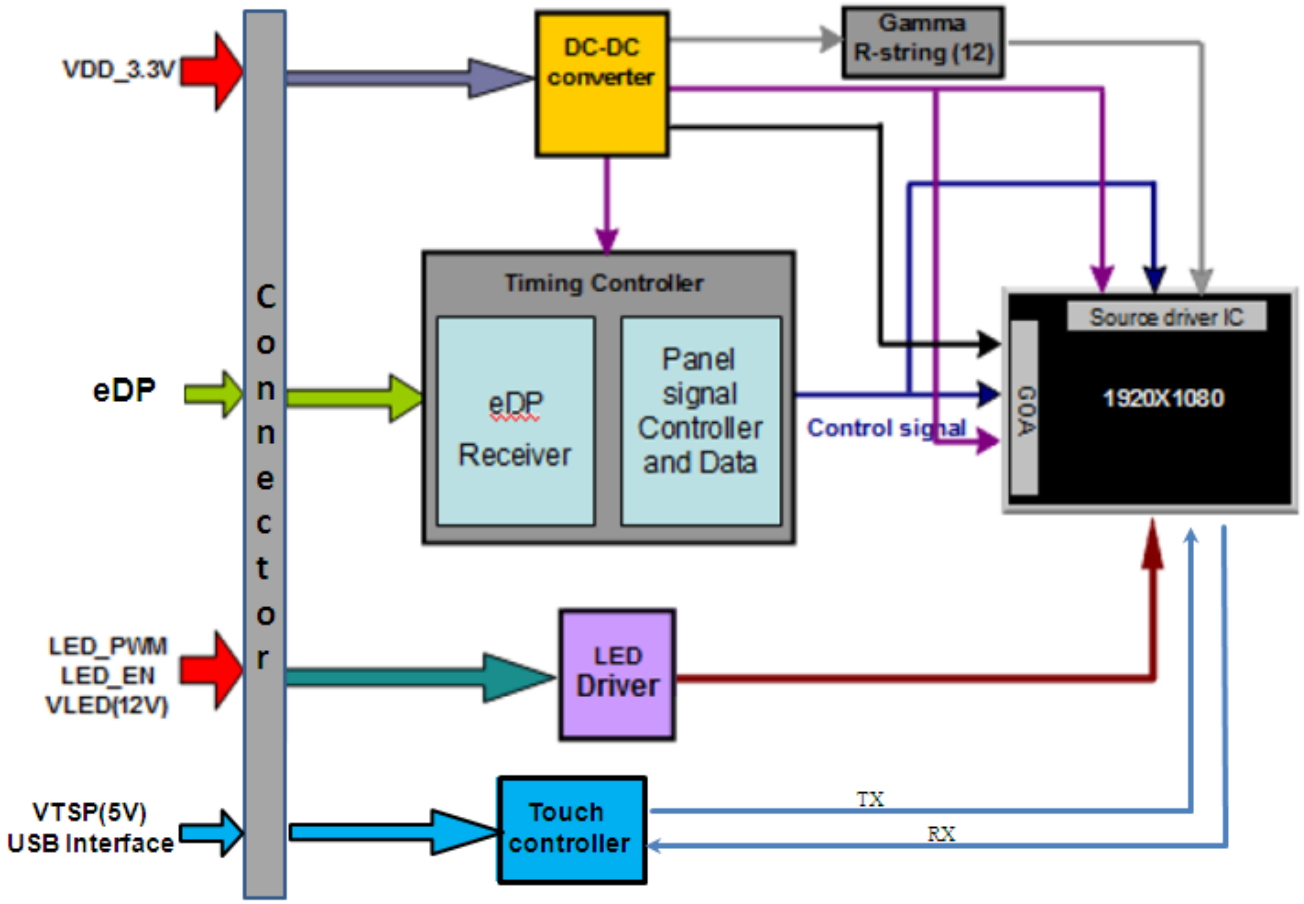

# 4. Absolute Maximum Ratings

## 4.1 Absolute Ratings of TFT LCD Module

| Item | Symbol | Min | Max | Unit |
|---|---|---|---|---|
| Logic/LCD Drive Voltage | Vin | -0.3 | +4.0 | [Volt] |

## 4.2 Absolute Ratings of Touch Sensor Module

| Item | Symbol | Min | Max | Unit |
|---|---|---|---|---|
| Touch Sensor Module Power Voltage | VTSP | -0.3 | 6.0 | [Volt] |

## 4.3 Absolute Ratings of Environment

| Item | Symbol | Min | Max | Unit |
|---|---|---|---|---|
| Operating Temperature | TOP | 0 | +50 | [°C] |
| Operation Humidity | HOP | 5 | 95 | [%RH] |
| Storage Temperature | TST | -20 | +60 | [°C] |
| Storage Humidity | HST | 5 | 95 | [%RH] |

Note: Maximum Wet-Bulb should be 39℃ and no condensation.

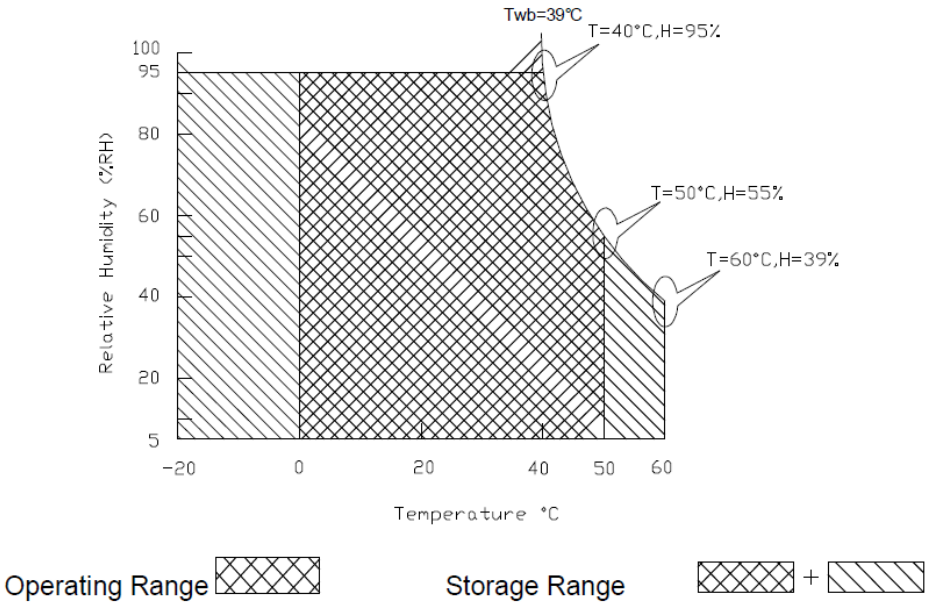


nfidential

# 5. Electrical Characteristics

## 5.1 TFT LCD Module

### 5.1.1 Power Specification

Input power specifications are as follows;

The power specification are measured under 25℃ and frame frenquency under 60Hz

| Symble | Parameter | Min | Typ | Max | Units | Note |
|---|---|---|---|---|---|---|
| VDD | Logic/LCD Drive Voltage | 3.0 | 3.3 | 3.6 | [Volt] | |
| PDD | VDD Power | - | - | 0.8 | [Watt] | Note 1 |
| IDD | IDD Current | - | - | 0.22 | [A] | Note 1 |
| IRush | Inrush Current | - | - | 2000 | [mA] | Note 2 |
| VDDrp | Allowable Logic/LCD Drive Ripple Voltage | - | - | 100 | [mV] p-p | |

**Note 1 :** Maximum Measurement Condition：Black Pattern at 3.3V driving voltage. ($P_{max}=V_{3.3} \times I_{black}$)

Typical Measurement Condition: Mosaic Pattern

**Note 2：** Measure Condition

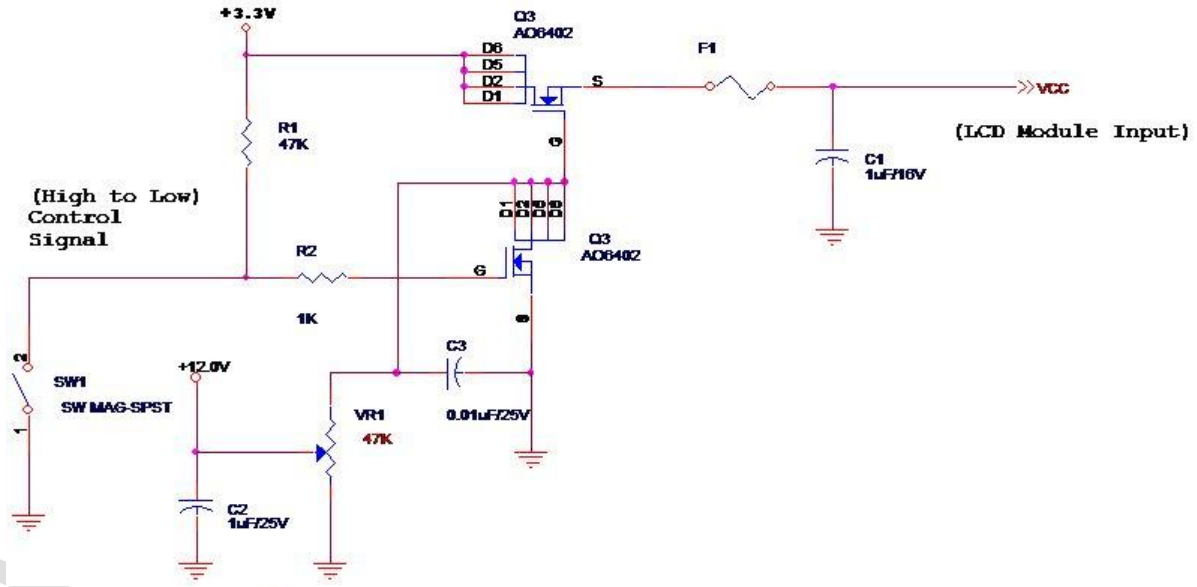


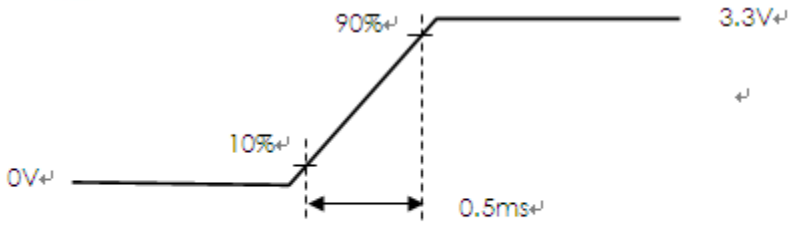


Vin rising time

### 5.1.2 Signal Electrical Characteristics

Signal electrical characteristics are as follows;

**Display Port main link signal:**

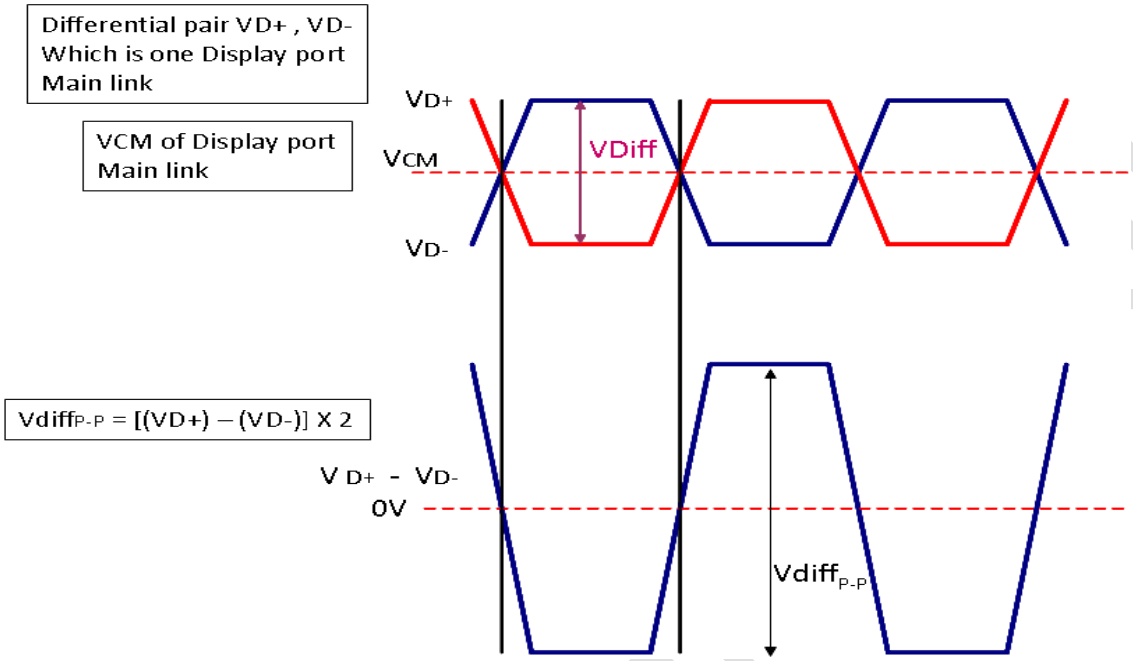


| Display port main link | | | | | |
|---|---|---|---|---|---|
| | | Min | Typ | Max | unit |
| VCM | RX input DC Common Mode Voltage | | 0 | | V |
| $VDiff_{P-P}$ | Peak-to-peak Voltage at a receiving Device | : 150 | | 1320 | mV |

Follow as VESA display port standard V1.3

**Display Port AUX_CH signal:**

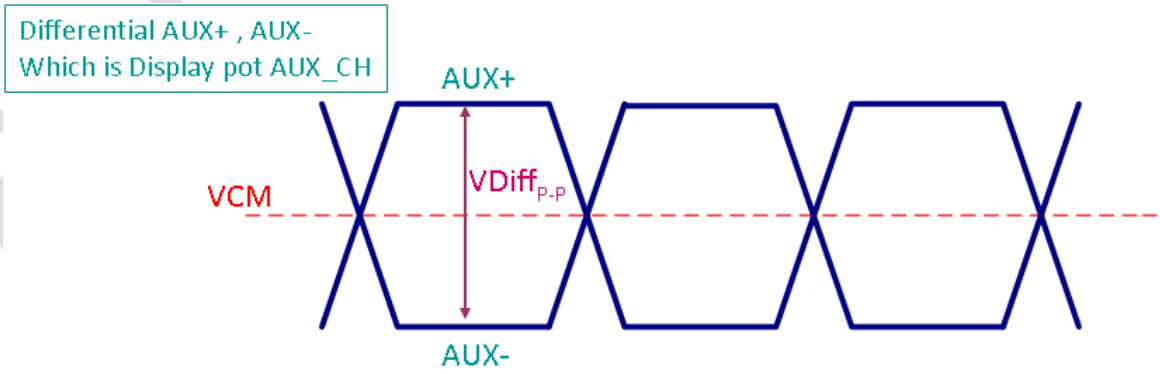

| Display port AUX_CH | | | | | |
|---|---|---|---|---|---|
| | | Min | Typ | Max | unit |
| VCM | AUX DC Common Mode Voltage | | 0 | | V |
| $VDiff_{P-P}$ | AUX Peak-to-peak Voltage at a receiving Device | 0.4 | 0.6 | 0.8 | V |

Fallow as VESA display port standard V1.1a.

**Display Port VHPD signal:**

| Display port VHPD | | | | | |
|---|---|---|---|---|---|
| | | Min | Typ | Max | unit |
| VHPD | HPD Voltage | 2.25 | - | 3.6 | V |

Fallow as VESA display port standard V1.1a.

AUO Confidential

## 5.2 Backlight Unit

### 5.2.1 Parameter guideline for LED

Following characteristics are measured under stable condition using a LED driving board at 25℃ (Room Temperature).

### LED characteristics

| Symbol | Parameter | Min | Typ | Max | Units | Condition |
|---|---|---|---|---|---|---|
| PLED | Backlight Power Consumption | -- | -- | 6.8 | [Watt] | |
| LTLED | LED Life-Time | 50000 | -- | -- | Hour | |

**Note 1:** Calculator value for reference $P_{LED}$ = VF (Normal Distribution) * IF (Normal Distribution) / Efficiency

**Note 2:** The LED life-time define as the estimated time to 50% degradation of initial luminous.

### Backlight input signal characteristics

| Parameter | Symbol | Min | Typ | Max | Units | Remark |
|---|---|---|---|---|---|---|
| LED Power Supply | VLED | 10.8 | 12.0 | 13.2 | [Volt] | Define as Connector Interface (Ta=25℃) |
| LED Enable Input High Level | VLED_EN *Note 1 | 2.5 | - | 5.5 | [Volt] | |
| LED Enable Input Low Level | | - | - | 0.8 | [Volt] | |
| PWM Logic Input High Level | VPWM_EN *Note 1 | 2.5 | - | 5.5 | [Volt] | |
| PWM Logic Input Low Level | | - | - | 0.8 | [Volt] | |
| PWM Input Frequency | FPWM | 200 | 1K | 20K | Hz | |
| PWM Duty Ratio | Duty | 5 | -- | 100 | % | |

**Note1:** Recommend system pull up/down resistor no bigger than 10kohm

## 5.3 Touch Sensor Module

### 5.3.1 Power Specification

| Items | Symbol | | Specifications | | | Unit | Notes |
|---|---|---|---|---|---|---|---|
| | | | Min. | Typ. | Max. | | |
| Touch sensor module Power Supply | VTSP | | 4.5 | 5 | 5.5 | V | |
| Touch sensor module Power Consumption | PTP | Active | - | - | 550 | mW | |
| | | Idle | - | - | - | mW | |
| | | Sleep | - | - | - | mW | |
| Touch Sensor Module Power ripple | VTSPrp | | - | - | 100 | mV | |

AUO Confidential

# 6. Signal Characteristic

## 6.1 Pixel Format Image

Following figure shows the relationship between input signal and LCD pixel format.

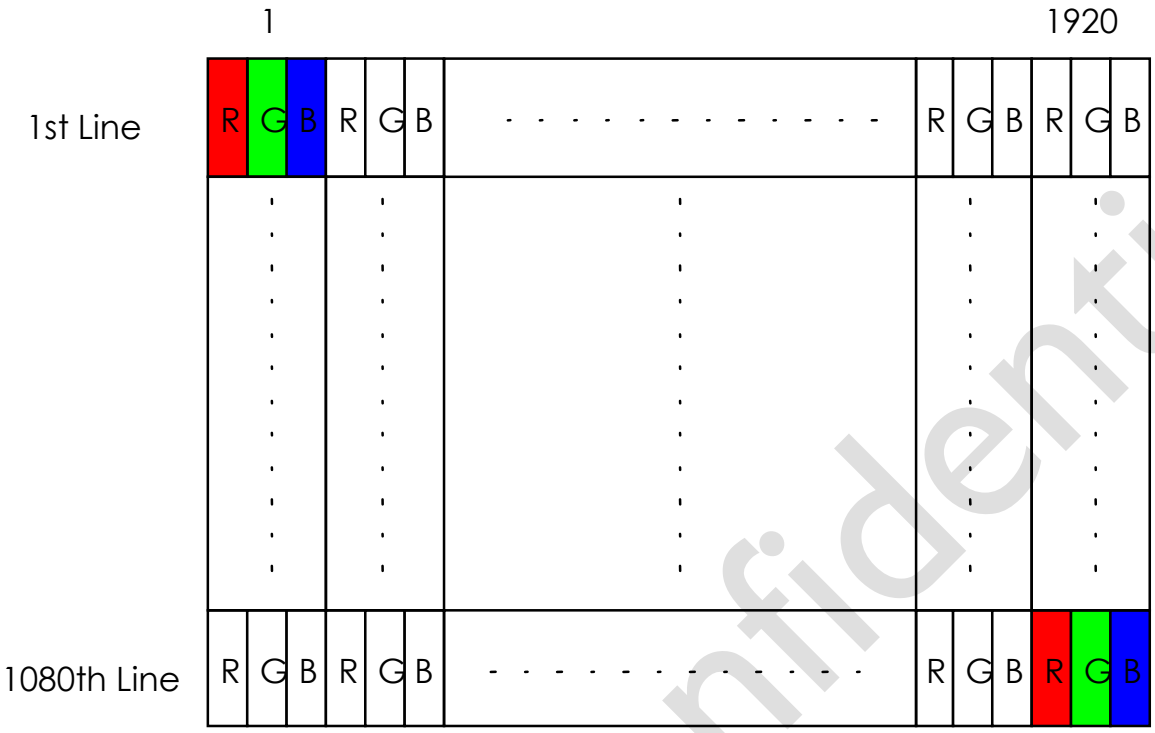


## 6.2 Scanning Direction

The following figures show the image seen from the front view. The arrow indicates the direction of scan.

AUO Confidential

## 6.3 Signal Description

### 6.3.1 Connector Description

Physical interface is described as for the connector on module.

These connectors are capable of accommodating the following signals and will be following components.

| Connector Name / Designation | For Signal Connector |
|---|---|
| Manufacturer | IPEX or compatible |
| Type / Part Number | IPEX 20765-040E-11A or compatible |
| Mating Housing/Part Number | IPEX 20453-040T-11 or Compatible |

### 6.3.2 Pin Assignment (with Touch Sensor Pin Assignment)

| PIN NO | Symbol | Function |
|---|---|---|
| 1 | NC | Reserved for I2C _ RST |
| 2 | NC | Reserved for I2C _INT |
| 3 | NC | Reserved for I2C _Data |
| 4 | NC | Reserved for I2C_CLK |
| 5 | NC | Reserved for TP_EN (Active High) |
| 6 | VTSP | Touch panel power supply |
| 7 | VTSP | Touch panel power supply |
| 8 | GND | Ground–Shield |
| 9 | TP_D+ | USB Data+ for Touch |
| 10 | TP_D- | USB Data- for Touch |
| 11 | NC | No Connect (Reserved for CM) |
| 12 | BL_PWR | Backlight power |
| 13 | BL_PWR | Backlight power |
| 14 | BL_PWR | Backlight power |
| 15 | BL_PWR | Backlight power |
| 16 | NC | No connect (Reserve for AUO TEST only) |
| 17 | NC | No connect (Reverse for AUO TEST only) |
| 18 | BL PWM DIM | System PWM signal Input |
| 19 | BL_Enable | Backlight On / Off |
| 20 | BL_GND | Backlight_ground |
| 21 | BL_GND | Backlight_ground |
| 22 | BL_GND | Backlight_ground |

AUO Confidential

| | | |
|---|---|---|
| 23 | BL_GND | Backlight_ground |
| 24 | HPD | HPD signal pin |
| 25 | LCD GND | LCD logic and driver ground |
| 26 | LCD GND | LCD logic and driver ground |
| 27 | LCD_Self_Test | No connect(Reverse for LCD panel shelf test Enable) |
| 28 | LCD_VCC | LCD logic and driver power |
| 29 | LCD_VCC | LCD logic and driver power |
| 30 | H_GND | High Speed Ground |
| 31 | AUX_CH_N | Comp Signal Auxiliary Ch. |
| 32 | AUX_CH_P | True Signal Auxiliary Ch. |
| 33 | H_GND | High Speed Ground |
| 34 | Lane0_P | True Signal Link Lane 0 |
| 35 | Lane0_N | Comp Signal Link Lane 0 |
| 36 | H_GND | High Speed Ground |
| 37 | Lane1_P | True Signal Link Lane 1 |
| 38 | Lane1_N | Comp Signal Link Lane 1 |
| 39 | H_GND | High Speed Ground |
| 40 | NC | No Connect |

**Note1:** Input signals shall be low or High-impedance state when VDD is off.
**Note2:** Internal circuit of **eDP inputs** are as following.

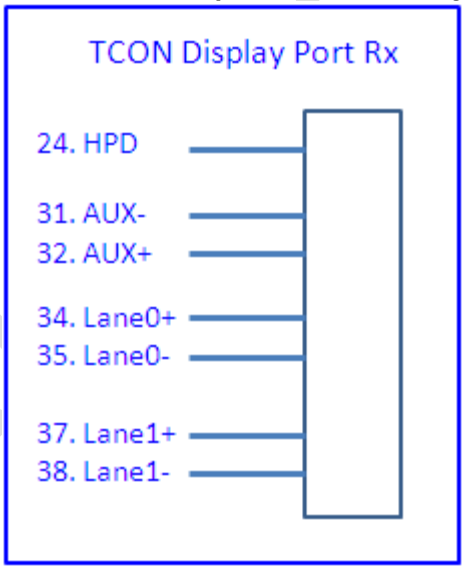


AUO Confidential

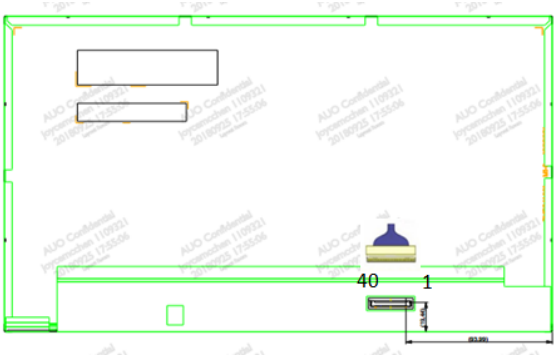


## 6.4 Interface Timing

### 6.4.1 Timing Characteristics

Basically, interface timings should match the 1920x1080 /60Hz manufacturing guide line timing.

| Parameter | | Symbol | Min. | Typ. | Max. | Unit |
|---|---|---|---|---|---|---|
| Frame Rate | | - | - | 60 | - | Hz |
| Clock frequency | | 1/ $T_{Clock}$ | | 141 | | MHz |
| Vertical Section | Period | $T_V$ | 1124 | 1128 | 1080+A | $T_{Line}$ |
| | Active | $T_{VD}$ | 1080 | | | |
| | Blanking | $T_{VB}$ | 44 | 48 | A | |
| Horizontal Section | Period | $T_H$ | 2076 | 2082 | 1920+B | $T_{Clock}$ |
| | Active | $T_{HD}$ | 1920 | | | |
| | Blanking | $T_{HB}$ | 156 | 162 | B | |

**Note1**: DE mode only

**Note2**: The maximum clock frequency = (1920+B)*(1080+A)*60 < 150MHz

**Note3:** Typical value refer to VESA STANDARD

AUO Confidential

## 6.4.2 Input Timing Diagram

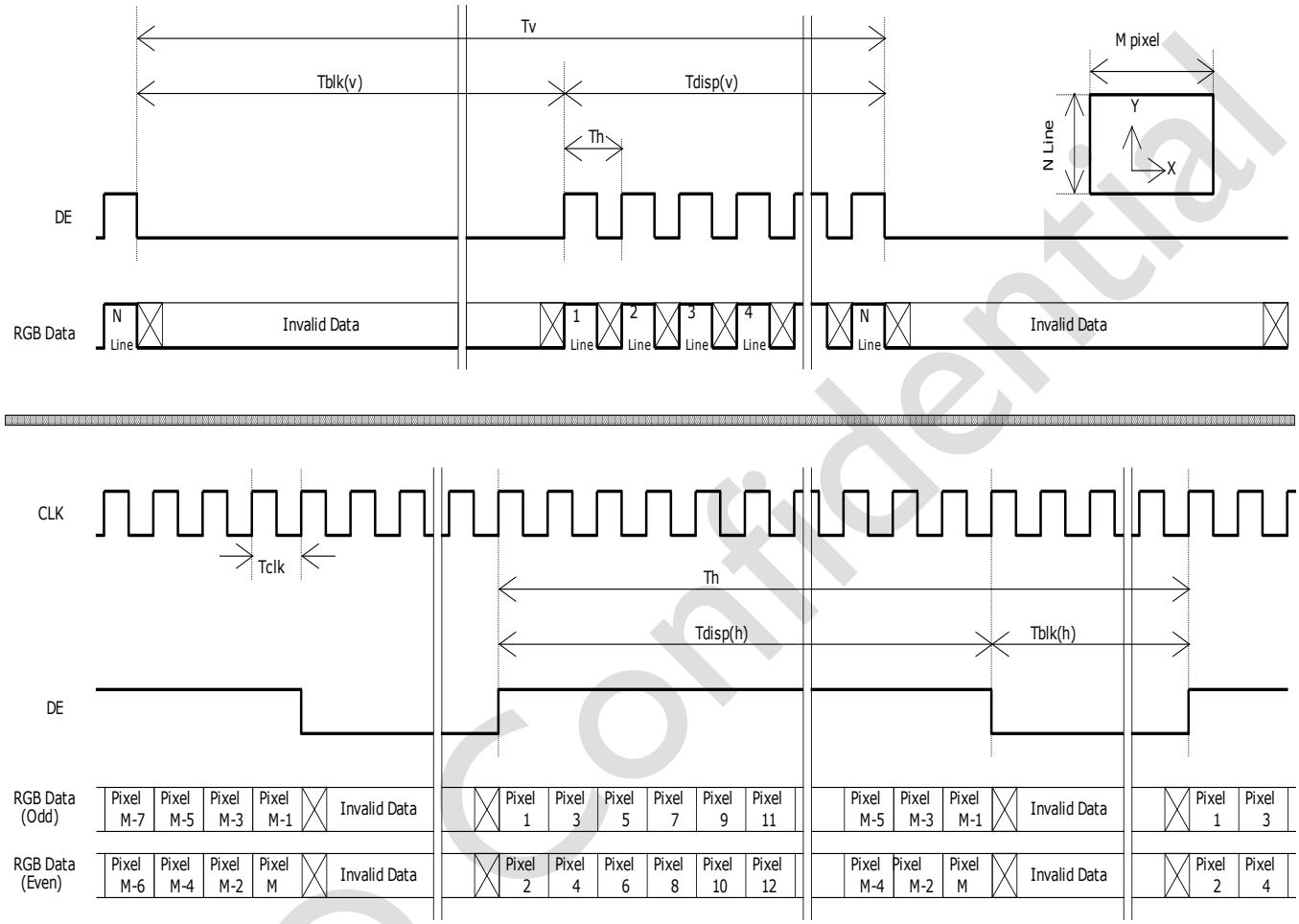


AUO Confidential

## 6.5 Power ON/OFF Sequence

### Display Port panel power sequence:

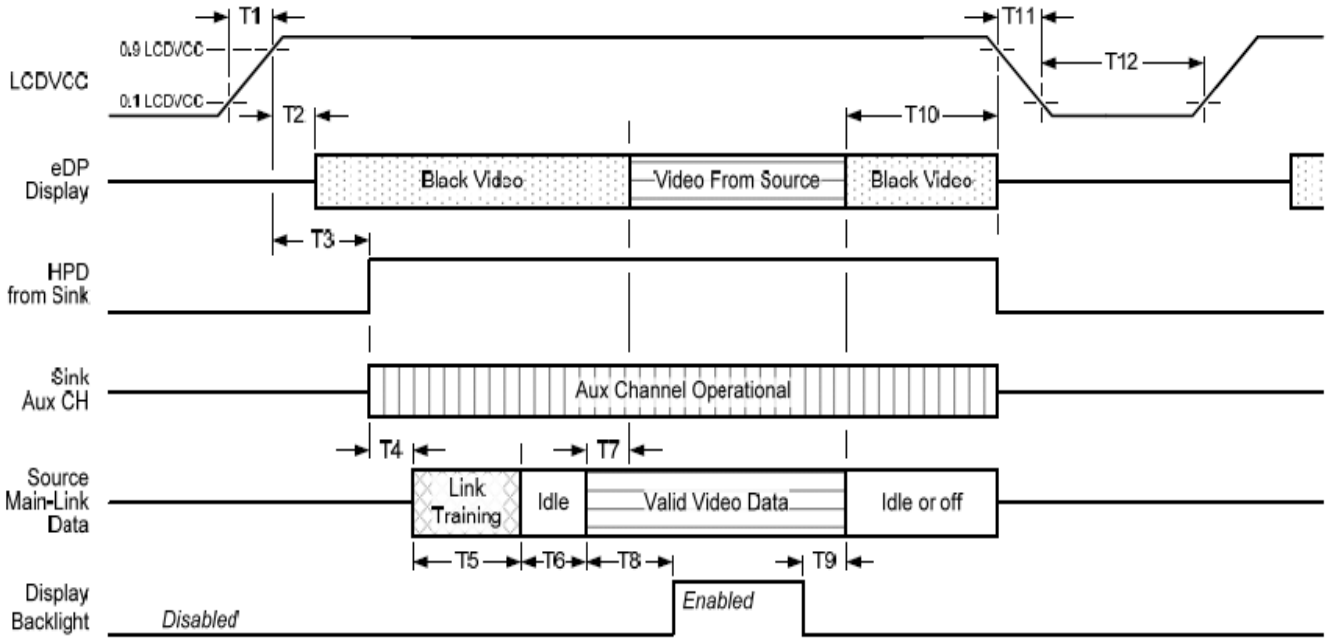


**Display port interface power up/down sequence, normal system operation**

### Display Port AUX_CH transaction only:

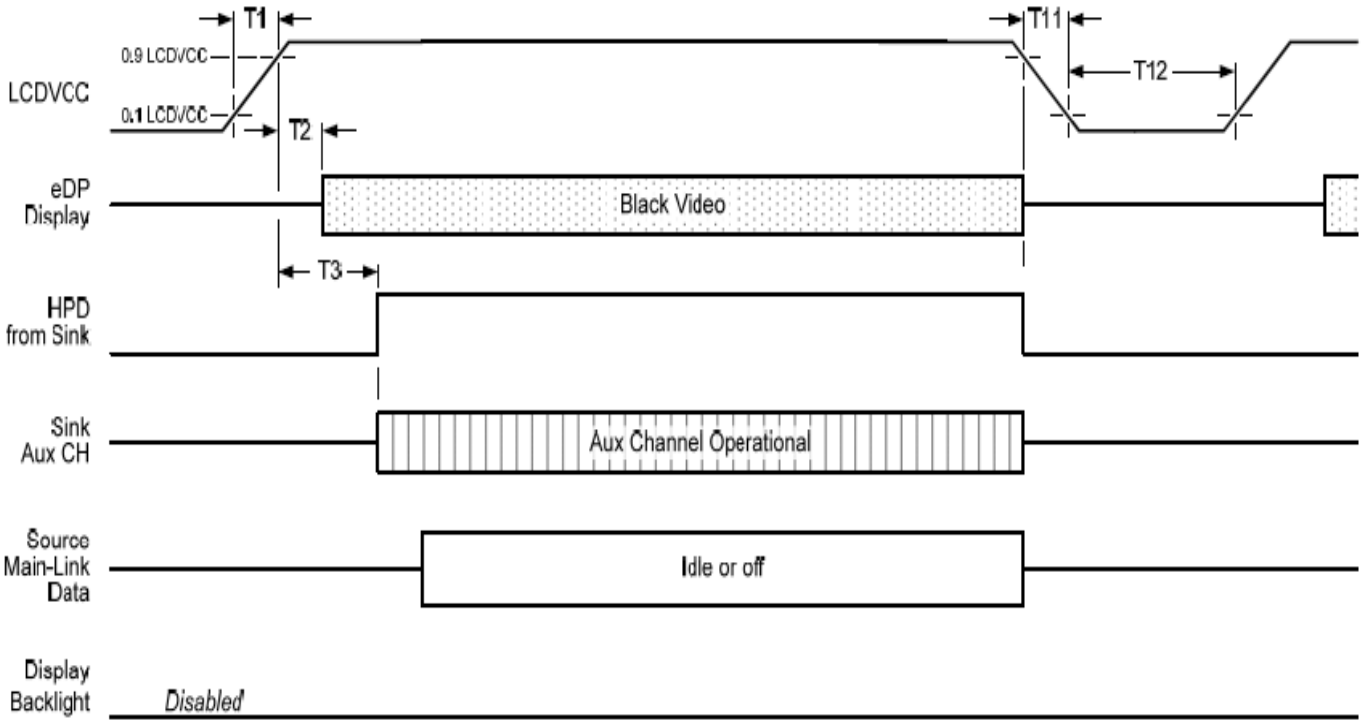


**Display port interface power up/down sequence, AUX_CH transaction only**

## Display Port panel power sequence timing parameter:

| Timing parameter | Description | Reqd. by | Limits | | | Notes |
|---|---|---|---|---|---|---|
| | | | Min. | Typ. | Max. | |
| T1 | power rail rise time, 10% to 90% | source | 0.5ms | | 10ms | |
| T2 | delay from LCDVDD to black video generation | sink | 0ms | | 200ms | prevents display noise until valid video data is received from the source |
| T3 | delay from LCDVDD to HPD high | sink | 0ms | | 200ms | sink AUX_CH must be operational upon HPD high. |
| T4 | delay from HPD high to link training initialization | source | | | | allows for source to read link capability and initialize. |
| T5 | link training duration | source | | | | dependant on source link to read training protocol. |
| T6 | link idle | source | | | | Min accounts for required BS-Idle pattern.<br>Max allows for source frame synchronization. |
| T7 | delay from valid video data from source to video on display | sink | 0ms | | 50ms | max allows sink validate video data and timing. |
| T8 | delay from valid video data from source to backlight enable | source | | | | source must assure display video is stable. |
| T9 | delay from backlight disable to end of valid video data | source | | | | source must assure backlight is no longer illuminated. |
| T10 | delay from end of valid video data from source to power off | source | 0ms | | 500ms | |
| T11 | power rail fall time, 905 to 10% | source | | | 10ms | |
| T12 | power off time | source | 500ms | | | |

**Note1:** The sink must include the ability to generate black video autonomously. The sink must automatically enable black video under the following conditions:

-upon LCDVDD power on (with in T2 max)-when the "Novideostream_Flag" (VB-ID Bit 3) is received from the source (at the end of T9).

-when no main link data, or invalid video data, is received from the source. Black video must be displayed within 64ms (typ) from the start of either condition. Video data can be deemed invalid based on MSA and timing information, for example.

**Note 2:** The sink may implement the ability to disable the black video function, as described in Note 1, above, for system development and debugging purpose.

**Note 3:** The sink must support AUX_CH polling by the source immediately following LCDVDD power on without causing damage to the sink device (the source can re-try if the sink is not ready). The sink must be able to respond to an AUX_CH transaction with the time specified within T3 max.

## Display Port panel B/L power sequence timing parameter:

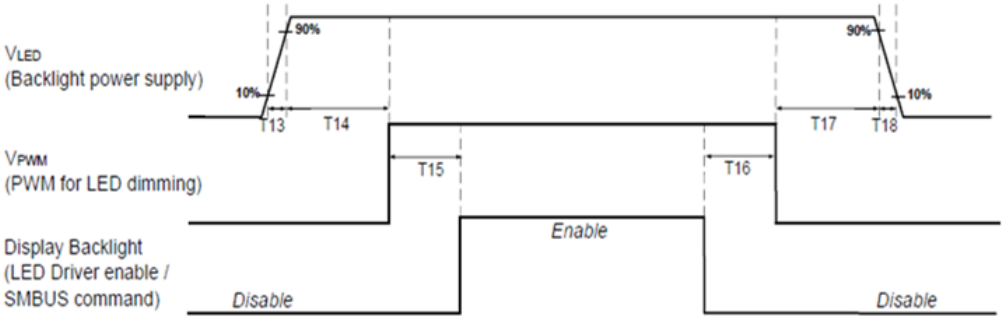


| | Min (ms) | Max (ms) |
|---|---|---|
| T13 | 0.5 | 10 |
| T14 | 10 | - |
| T15 | 10 | - |
| T16 | 10 | - |
| T17 | 10 | - |
| T18 | 0.5 | 10 |
| T19 | 1* | - |
| T20 | 1* | - |

Seamless change: T19/T20 = 5x$T_{PWM}$*

*$T_{PWM}$= 1/PWM Frequency

Note : When the adapter is hot plugged, the backlight power supply sequence is shown as below.

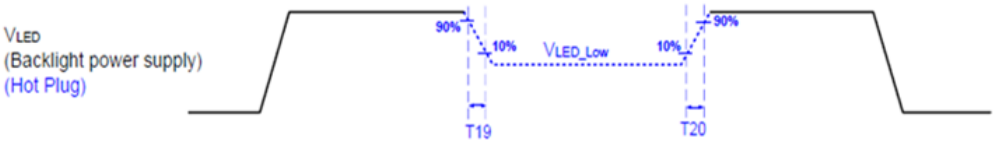


## Touch Power on Sequence:

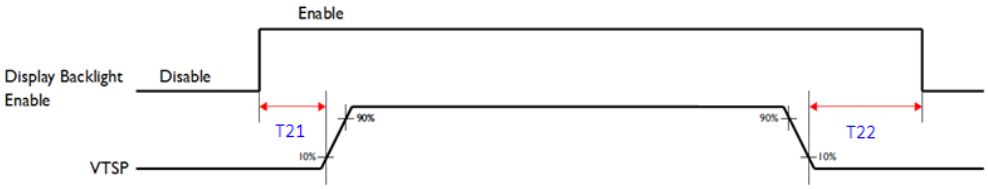


| | Min | Max |
|---|---|---|
| T21 | 10ms | - |
| T22 | 100ms | - |

# 7. Reliability Test Criteria

## 7.1 Vibration Test

Test Spec:

- Test method: Non-Operation
- Acceleration: 1.5 G
- Frequency: 10 - 200Hz Random
- Sweep: 30 Minutes each Axis (X, Y, Z)

## 7.2 Shock Test

Test Spec:

- Test method: Non-Operation
- Acceleration: 220 G , Half sine wave
- Active time: 2ms
- Pulse: X,Y,Z .one time for each side

## 7.3 Reliability Test

| Items | Required Condition | Note |
|---|---|---|
| Temperature Humidity Bias | Ta= 40℃, 90%RH, 300h | |
| High Temperature Operation | Ta= 50℃, Dry, 300h | |
| Low Temperature Operation | Ta= 0℃, 300h | |
| High Temperature Storage | Ta= 60℃, 35%RH, 300h | |
| Low Temperature Storage | Ta= -20℃, 50%RH, 250h | |
| Thermal Shock Test | -20℃/30 min ,60℃/30 min ,100cycles | |
| ESD | Contact : ± 8KV/ operation, Class B<br>Air : ± 15KV / operation, Class B | Note 1 |

Note1: According to EN61000-4-2, ESD class B: Some performance degradation allowed. No data lost . Self-recoverable. No hardware failures.

Note 2:

- Water condensation is not allowed for each test items.
- Each test is done by new TFT-LCD module. Don't use the same TFT-LCD module repeatedly for reliability test.
- The reliability test is performed only to examine the TFT-LCD module capability.
- To inspect TFT-LCD module after reliability test, please store it at room temperature and room humidity for 24 hours at least in advance.
- No function failure occurs.

AUO Confidential

# 8. Mechanical Characteristics

## 8.1 LCM Outline Dimension (Front View and back view)

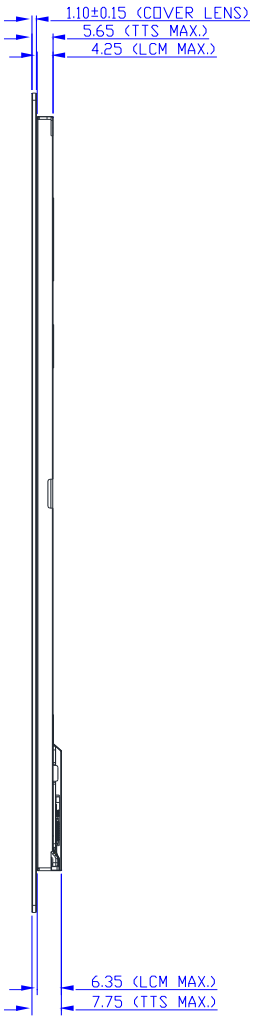


AUO Confidential

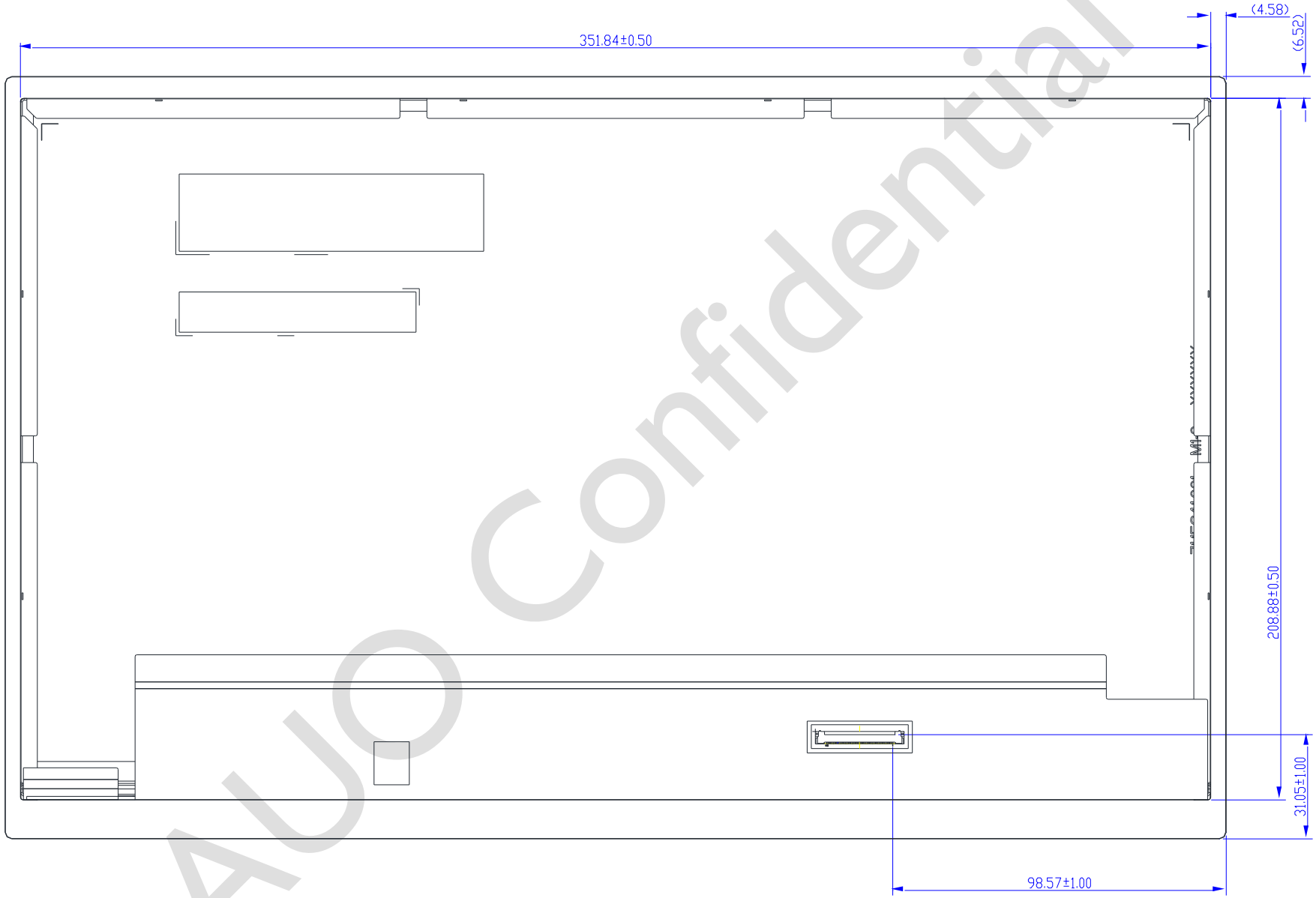


AUO Confidential

# 9. Label and Packaging

## 9.1 Shipping Label (on the rear side of TFT-LCD display)

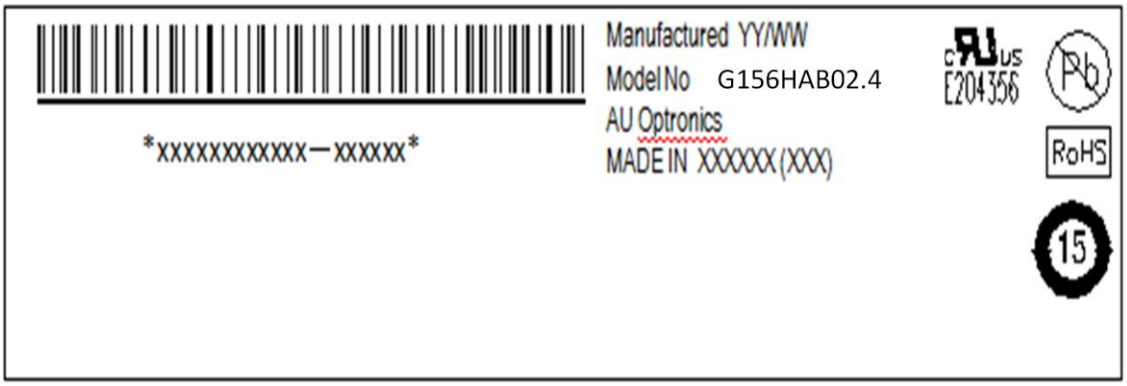


AUO Confidential

## 9.2 Carton Package

1、Put out PP Board

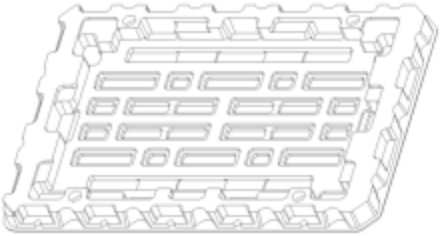

2、Tray placed on PP Board

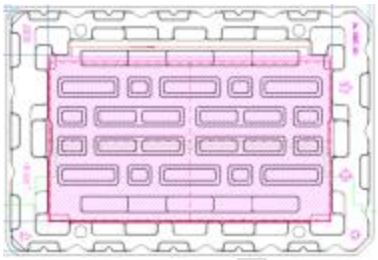

3、Put 1Pcs EPE Spacer into Tray

4、Put 1pcs panel on First Spacer

, **CF upwards in Tray**

5、Finally,

1 Pcs Tray contained 1pcs Panel + 1pcs Spacer

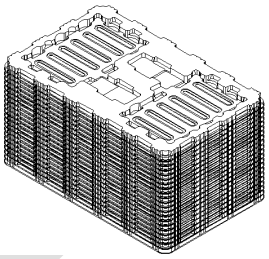

6、Stack 17 layers PET tray as the method mention above (16tray+1dummy tray)

7、Insert the package from the sideway of the Antistatic Bag. Pack the bag, and then tape with scotch tape.

8、Placing EPE into carton

9、Placing trays into carton

10、Cover with EPE cushion

11、Sealing the carton with packing tape

AUO Confidential

**Palletizing sequence**

The operation of taking shape and related information of full carton:

Max capacity：16 TFT-LCD module per carton

Max weight: 14kg per carton

Outside dimension of carton: 508mm(H)*408mm(W)*279mm(H)

Pallet size： 1150 mm * 840 mm * 132mm

**Box stacked**

Module by air：(2 *2) *5 layers，one pallet put 20 boxes，total 320pcs module
Module by sea：One pallet (2 *2) *5 layers + One pallet (2 *2) *1ayers，total 384pcs module
Module by sea_ HQ : One pallet (2 *2) *5 layers + One pallet (2 *2) *2 layers，total 448pcs module

## 9.3 Shipping Package of Palletizing Sequence

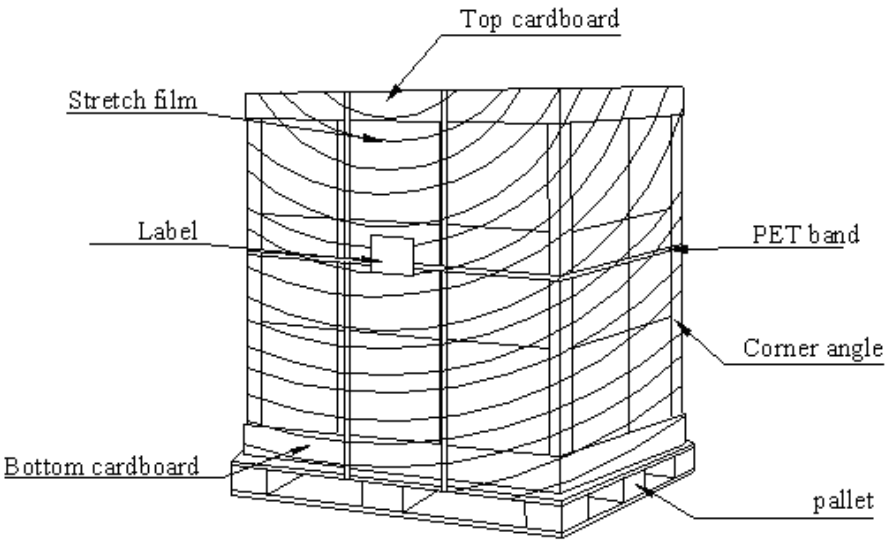


AUO Confidential

# 10. Safety

## 10.1 Sharp Edge Requirements

There will be no sharp edges or comers on the display assembly that could cause injury.

## 10.2 Materials

### 10.2.1 Toxicity

There will be no carcinogenic materials used anywhere in the display module. If toxic materials are used, they will be reviewed and approved by the responsible AUO toxicologist.

### 10.2.2 Flammability

All components including electrical components that do not meet the flammability grade UL94-V1 in the module will complete the flammability rating exception approval process.

The printed circuit board will be made from material rated 94-V1 or better. The actual UL flammability rating will be printed on the printed circuit board.

## 10.3 Capacitors

If any polarized capacitors are used in the display assembly, provisions will be made to keep them from being inserted backwards.

## 10.4 National Test Lab Requirement

The display module will satisfy all requirements for compliance to:

| | |
|---|---|
| **UL 60950-1, Second Edition** | U.S.A. Information Technology Equipment |

AUO Confidential