2240-2241 $LiFePO_4$ Max. 1,3 A

Chargers for $LiFePO_4$ batteries - switch mode

2241 $LiFePO_4$- exchangeable AC plugs

HY-LINE® mascot tech spec

- 3-step charge control with current detection as charge termination
- Universal input voltage (90-264 VAC)
- 2-pin IEC 320 mains connector
- Charging 1-8 battery cells
- Mounting bracket available
- Order plugs/cord separately
- Waterproof (IP67) version available
- Custom specifications on request
- Exchangeable AC and DC plugs
- Approvals:
  - Medically certified
    Safety: EN 60601-1 ed 3.1
    EMC: EN 60601-1-2-ed. 4
  - UL approved

For updates: see www.mascot.no

AC-X Exchange AC Plugs | DC-X Exchange DC Plugs | MEDICAL | IP67

2241 2240

TECHNICAL SPECIFICATIONS

GENERAL INPUT/OUTPUT

Input voltage:	90-264 VAC
Line frequency:	47 – 63Hz
Switch frequency, approx.:	40kHz
Leakage current from battery with mains switched off:	≈ 0
Temperature range	
• **Operating:**	-25 °C - +40 °C
• **Storage:**	-25 °C - +8 °C
Ripple:	< 100 mV p-p
Dimensions (L×W×H):	90 × 45 × 32mm (2240)
Weight:	115g (215g IP67 vers.)

SAFETY PROTECTION EMC

Protection:	Protected against reversed polarity and short circuit proof
Insulation class:	II
Insulation voltage	
• **Primary – secondary:**	4000VAC / 5640VDC
Electrical safety standard:	EN 60601-1, EN 60950, EN 60335-2-29, UL 60601-1
EMC standards	
• **Medical:**	EN 60601-1-2
• **Emission:**	EN 61000-6-3
• **Immunity:**	EN 61000-6-1
Reliability (MIL-HDBK-217F):	MTBF > 250.000h at 30°C and full load
Output terminals:	Cord with/without plug
IP-code:	4X

CHARGE CONTROL

			Step 1 (orange)	Step 2 (orange)	Step 3 (green)	
Cells	**Max. output power (W)**	**Efficiency at 100% load, 230VAC**	**Charge current**	**Charge voltage**	**To float charge when current is <**	**Float charge voltage**
1	4,7	58 %	1,3A +5/-7%	3,65V +-0,05V	100mA +-25%	3,5V+0,05-0,15V
2	9,5	72 %	1,3A +5/-7%	7,3V +-0,1V		7,0V+0,1-0,15V
4	13,1	80 %	0,9A +5/-7%	14,6V +-0,1V		14,0V+0,1-0,15V
8	16,35	82 %	0,56A +5/-7%	29,2V +-0,1V		28,0V+0,1-0,15V

Mascot AS Headquarters • PO Box 177 • 1601 Fredrikstad NORWAY • +47 69 36 43 00 • sales@mascot.no • www.mascot.no

mascot tech spec

For 2241LiFePO$_4$ only: Exchangeable AC plug models

2-pin IEC 320 C7 mains cord
1800 mm EU part no. 131306
UK part no. 131148, US part no. 131147, AU part no. 013108

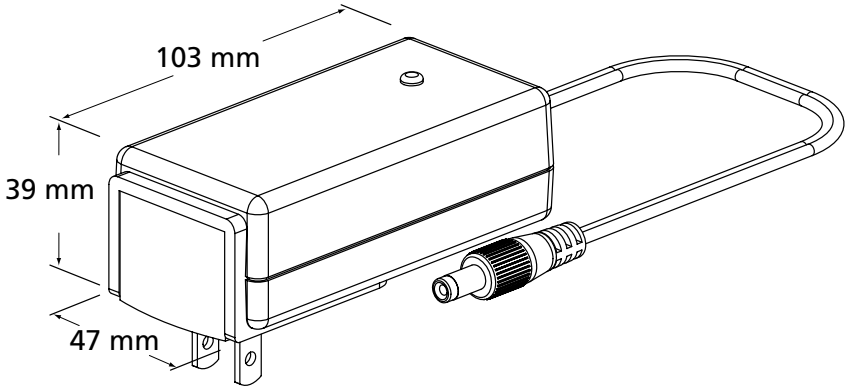

EU plug
Part no. 018110
Weight: 21 g

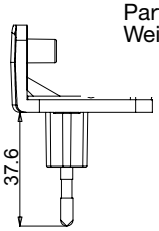

UK plug
Part no. 018112
Weight: 30 g

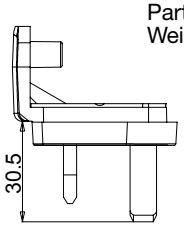

US plug
Part no. 018111
Weight: 14 g

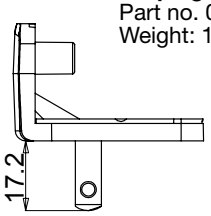

AU plug
Part no. 018114
Weight: 28 g

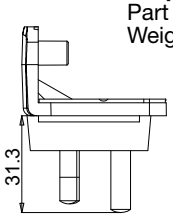

Mascot AS Headquarters • PO Box 177 • 1601 Fredrikstad NORWAY • +47 69 36 43 00 • sales@mascot.no • www.mascot.no